1

Introduction

COPYRIGHTED MATERIAL

In this chapter, an overview of the book is given at first, followed by some basics about power processing and some hardware issues relevant to the design of power inverters. Moreover, wind power systems, solar power systems and smart grid integration are briefly described to set the scene for the rest of the book.

1.1 Outline of the Book

After making an introduction in this chapter and presenting preliminaries in Chapter 2, the book is divided into four Parts: Power Quality Control (Chapters 3–9), Neutral Line Provision (Chapters 10–14), Power Flow Control (Chapters 15–21) and Synchronisation (Chapters 22–23). The overall structure of the book is shown in Figure 1.1. Some chapters are related to more than one part, which is not shown in Figure 1.1 but will be mentioned below.

Part I is devoted to the power quality issues of the current fed into the grid and the output voltage of an inverter. A current controller is designed in Chapter 3 with the H^∞ repetitive control strategy so that the current injected into the grid is clean. This chapter is also directly linked to Part III under the category of current-controlled strategies. Several control strategies are presented in Chapters 4–8 to address voltage quality issues based on different mechanisms. In Chapters 4 and 5, the controllers are designed based on the H^∞ repetitive control strategy, with different sets of feedback signals and different models. Both the voltage quality and the current quality are addressed in Chapter 6 with a cascaded current–voltage controller, according to the H^∞ repetitive control strategy. In Chapters 4–6, the voltage quality issues are addressed essentially from the control point of view as a tracking problem. The voltage quality issue can also be addressed involving fundamental understanding about the degradation mechanisms of voltage quality. In Chapter 7, it is shown that the output impedance of an inverter can be changed to obtain inverters with inductive, resistive and capacitive output impedances,

Control of Power Inverters in Renewable Energy and Smart Grid Integration, First Edition.
Qing-Chang Zhong and Tomas Hornik.
© 2013 John Wiley & Sons, Ltd. Published 2013 by John Wiley & Sons, Ltd.

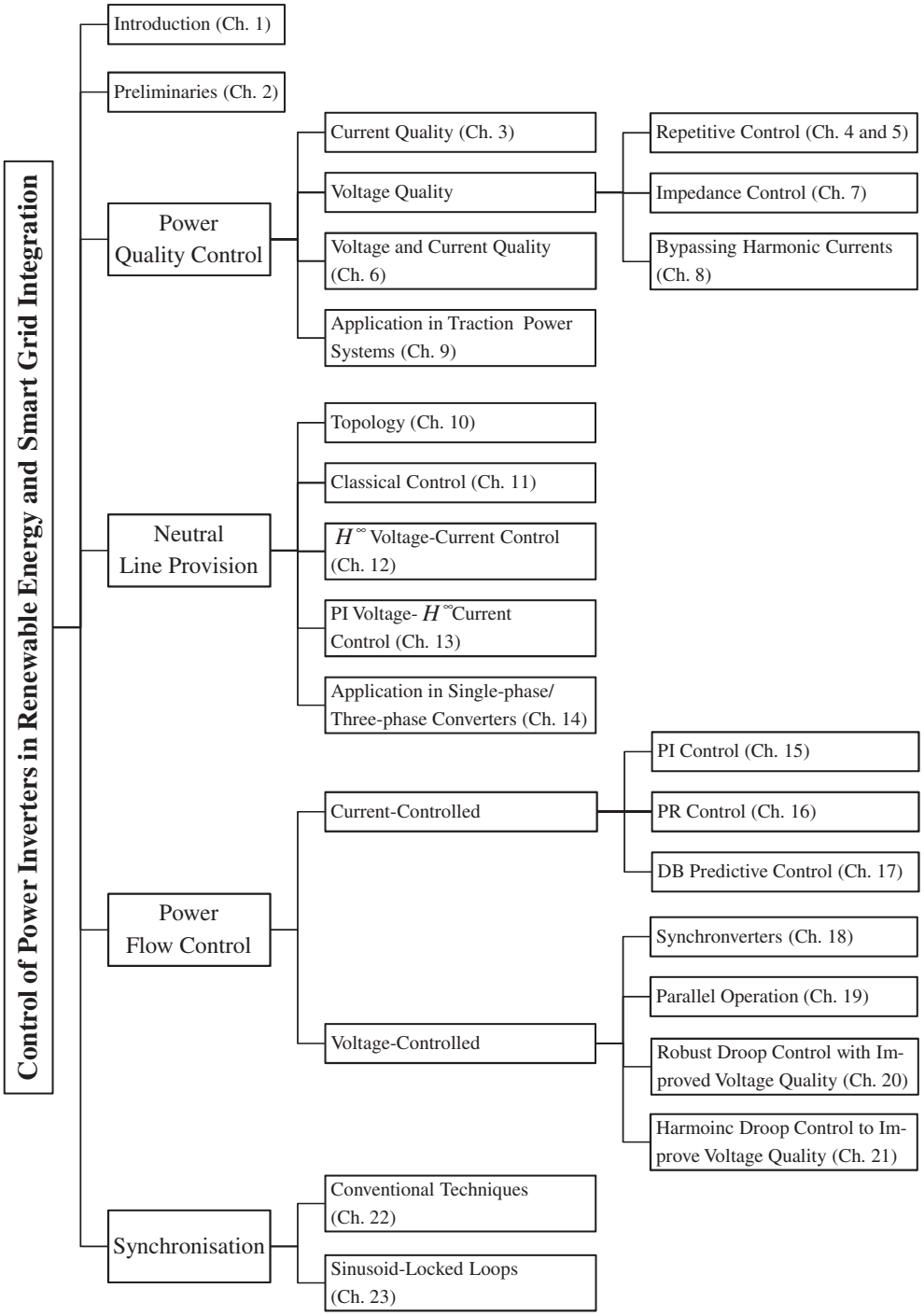

Figure 1.1 Structure of the book

which are called L-inverters, R-inverters and C-inverters, respectively. C-inverters are able to offer much better voltage quality than L-inverters and R-inverters with the same hardware. In Chapter 8, a strategy that is the same as bypassing the harmonic components in the load current is presented to improve the voltage quality. Another strategy that falls into this category is to inject the right amount of voltage harmonics into the reference voltage of an inverter so that it cancels the harmonic voltage dropped on the output impedance, which improves the quality of the output voltage. This is presented in Chapter 21, in Part III, after presenting the robust droop control in Chapter 19. As an application example, the power quality issues in traction power systems, including current harmonics, negative-sequence currents and low power factor, are addressed in Chapter 9.

Part II is devoted to the provision of an independently-controlled neutral line, which facilitates the implementation of other functions in a power electronic system. The topologies to provide a neutral line are presented in Chapter 10. In Chapter 11, a controller is designed to maintain a stable neutral point with classical control strategies, from which the parameters of the neutral leg are determined. In Chapter 12, a controller is designed with the H^∞ control strategy, taking the voltage shift of the neutral point and the current flowing into the DC-link capacitors as feedback. In Chapter 13, an H^∞ current controller is designed to minimise the current flowing into the DC-link capacitor and a PI controller is designed to bring the DC voltage shift back to the mid-point of the DC link. These two controllers are decoupled in the frequency domain and, hence, can be arranged in a parallel control structure. The provision of an independently-controlled neutral line is applied in Chapter 14, as an application example, to the generation of an independent three-phase power supply from a single-phase source.

Part III is devoted to power flow control. The control strategies can be classified into two categories: current-controlled strategies to directly control the current exchanged with the grid and voltage-controlled strategies to control the voltage of the inverter so that the power flow is indirectly controlled. Current-controlled strategies are easy to implement but the inverters equipped with current-controlled strategies cannot directly take part in the regulation of power system frequency and voltage and, hence, they may cause problems for system stability when the share of power fed into the grid is significant. The PI control, PR control and DB predictive control presented in Chapters 15–17 belong to this category. The repetitive controller presented in Chapter 3, in Part I, also belongs to this category. Voltage-controlled strategies have attracted a lot of attention from academia and industry in recent years because they are able to take part in the regulation of system frequency and voltage. In Chapter 18, a control strategy is presented to make inverters mathematically equivalent to conventional synchronous generators. Such inverters are called synchronverters. As a result, all the technologies developed for synchronous generators can be applied to inverters, which considerably facilitates the grid connection of renewable energy and smart grid integration. A highly compact controller is presented to implement the functions of frequency control, real power control, voltage control and reactive power control. In Chapter 19, the parallel operation of inverters is discussed. After presenting the conventional droop control strategies for L-, R- and C-inverters, the inherent limitations of the conventional droop control are revealed. The accuracy of power sharing greatly depends on the accuracy and consistency of the components, and the voltage regulation capability is poor. Then, robust droop control strategies for R-inverters, L-inverters and C-inverters are presented so that accurate sharing of both real power and reactive power can be achieved even if there are component mismatches, numerical errors, disturbances and noises, etc. A byproduct is that the voltage regulation capability is considerably enhanced as well. In order to improve the

voltage quality of parallel-operated inverters, a strategy that combines the strategy in Chapter 8 with the robust droop control in Chapter 19 is presented in Chapter 20, and a strategy to inject the right amount of harmonic voltages into the reference voltage is presented in Chapter 21, respectively.

Part IV is devoted to the synchronisation of inverters with another source. The conventional synchronisation techniques are presented in Chapter 22, with detailed discussions about basic PLL, STA and SOGI-PLL. In Chapter 23, a synchronisation strategy based on the operation principles of synchronous generators is presented to quickly detect the amplitude, frequency and phase of the fundamental component of a periodic signal.

Most of the strategies are demonstrated with extensive experimental results and, hence, can be directly applied in practice with minimum effort.

1.2 Basics of Power Processing

Power processing is to convert a power source into a voltage or current supply that is suitable for the load, as shown in Figure 1.2. It involves the integration of power electronic devices and a controller. There are four types of power processing: AC-DC conversion, DC-DC conversion, DC-AC conversion and AC-AC conversion. These are the subject of many books on power electronics (Bose 2001; Erickson and Maksimović 2001; Fisher 1991; Mohan 2003; Rashid 1993; Thorborg 1988; Vithayathil 1995), and will be briefly described here, assuming that all the devices are ideal.

1.2.1 AC-DC Conversion

The conversion from AC to DC is often called rectification and the converter used is called a rectifier. For an ideal rectifier, it is expected that the output voltage is a pure DC signal without any ripples and the input current is in phase with the voltage and does not have harmonics. According to the power electronic devices adopted, rectifiers can be divided into uncontrolled rectifiers with diodes, phase-controlled rectifiers with thyristors and PWM-controlled rectifiers with IGBTs or MOSFETs.

1.2.1.1 Uncontrolled Rectifiers

Figure 1.3(a) shows the simplest rectifier, which consists of a diode. For the sinusoidal input voltage shown in Figure 1.3(b), the output voltage is shown in Figure 1.3(c). Only the positive

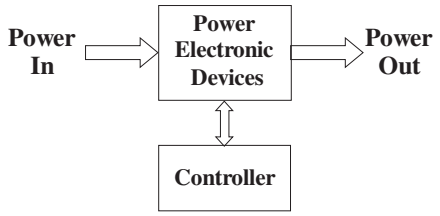

Figure 1.2 Sketch of power processing

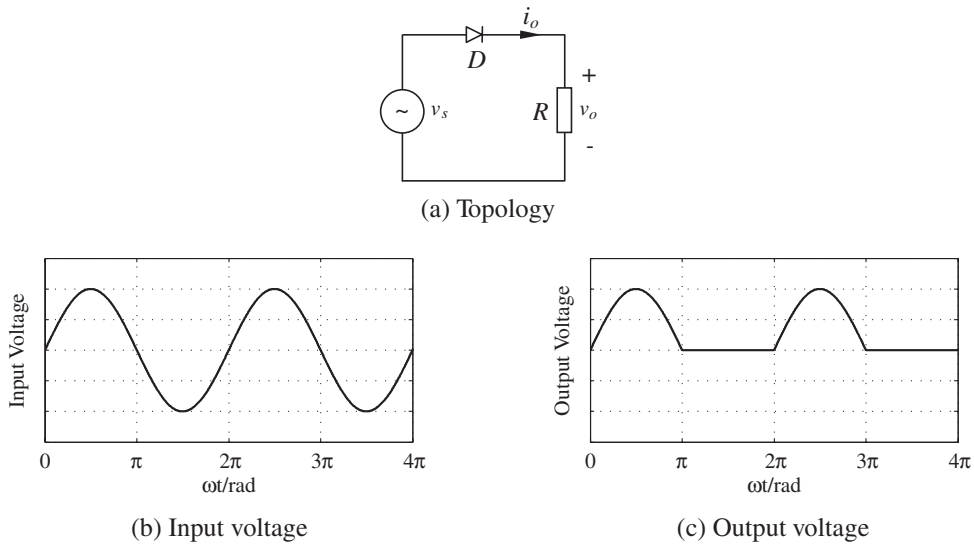

Figure 1.3 Uncontrolled rectifier with a diode

half cycle of the input voltage can pass the diode to reach the load and, hence, the output voltage is of DC but with a significant amount of ripples. The input current is not sinusoidal either so there is a significant amount of harmonic currents.

In order to reduce the ripples in the output voltage and to reduce the harmonics in the input current, several diodes are often connected to form bridge rectifiers. Figure 1.4 shows a single-phase bridge rectifier and its operation principle. Compared to the rectifier with one diode shown in Figure 1.3(a), both half cycles of the input voltage are passed to the load. As a result, the ripples in the output voltage are reduced and the harmonic components in the input current are reduced as well. In this case, the DC output voltage is

$$V_o = \frac{1}{\pi}\int_0^{\pi} \sqrt{2}V_s \sin\omega t \,\mathrm{d}(\omega t) = \frac{2\sqrt{2}}{\pi}V_s \approx 0.9V_s,$$

where V_s is the RMS value of the input voltage.

For three-phase applications, the bridge rectifier shown in Figure 1.5 can be adopted. The pair of diodes with the highest instantaneous line voltage conduct, in the order of $D_1D_2 \rightarrow D_2D_3 \rightarrow D_3D_4 \rightarrow D_4D_5 \rightarrow D_5D_6 \rightarrow D_6D_1 \rightarrow D_1D_2$ for 120° each time. Hence, the output voltage is the envelope of the line voltages with six ripples, which further improves the performance of the DC output voltage. In this case, the DC output voltage is

$$V_o = \frac{1}{\pi/6}\int_0^{\pi/6} \sqrt{2} \times \sqrt{3}V_s \cos\omega t \,\mathrm{d}(\omega t) = \frac{3\sqrt{6}}{\pi}V_s \approx 2.34V_s,$$

where V_s is the RMS value of the phase input voltage.

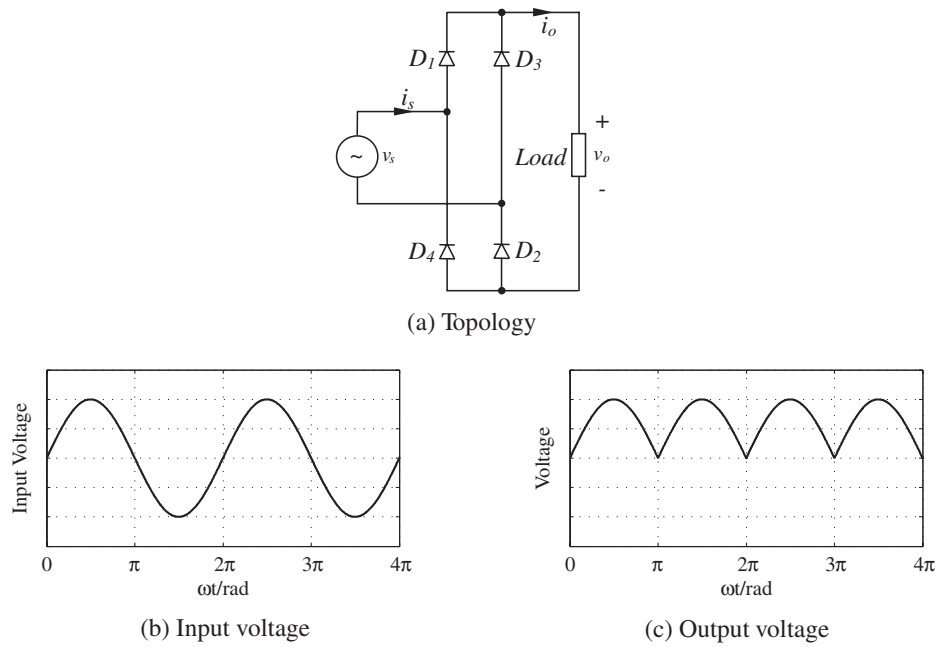

(a) Topology

(b) Input voltage

(c) Output voltage

Figure 1.4 Uncontrolled bridge rectifier

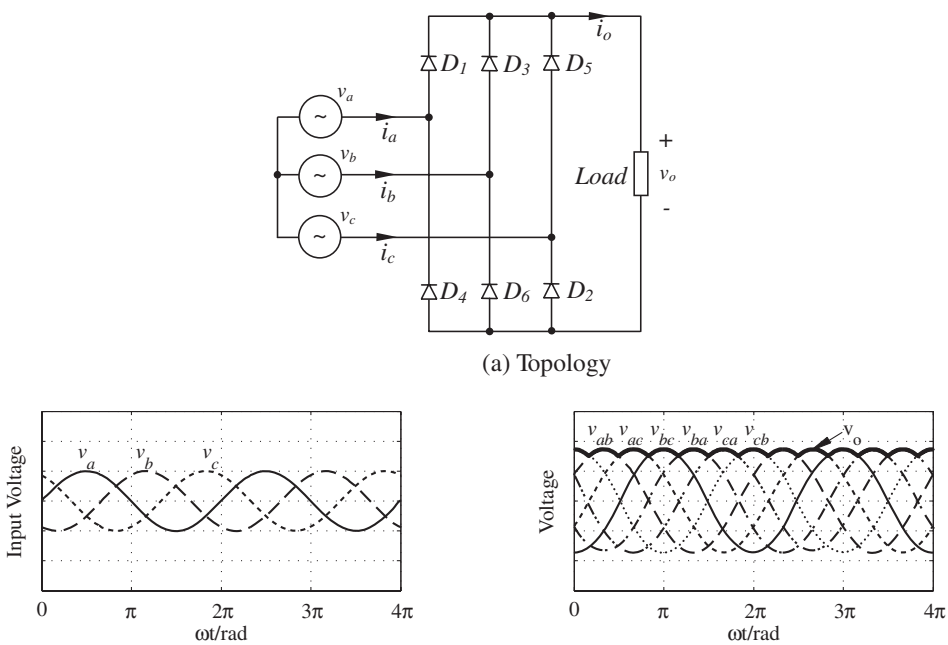

(a) Topology

(b) Input voltages

(c) Output voltage

Figure 1.5 Uncontrolled three-phase bridge rectifier

In practice, capacitors are often connected to the output of a rectifier to filter out the voltage ripples and inductors are often adopted to smooth the load current.

1.2.1.2 Phase-controlled Rectifiers

Diode rectifiers can only provide fixed output voltages. In order to obtain a variable DC output voltage, thyristors, which can be turned on by applying a firing pulse when forward biased, can be adopted to form phase-controlled rectifiers. The output voltage of a phase-controlled rectifier can be changed by varying the firing angle of the thyristors. Phase-controlled rectifiers, often with an efficiency above 95%, are widely used in many industrial applications, especially in variable-speed drives.

Figure 1.6 shows a phase-controlled single-phase full-bridge rectifier and its operation. During the positive half-cycle of the input voltage, thyristors T_1 and T_2 are forward biased and the input voltage is passed to the load through T_1 and T_2 after they are fired. Because of the large inductive load, thyristors T_1 and T_2 continue conducting even when the input voltage becomes negative. Similarly, during the negative half-cycle of the input voltage, thyristors T_3 and T_4 are forward biased and the voltage is rectified and passed to the load after they are fired. Thyristors T_1 and T_2 are forced to turn off when they are backward biased and the load current is transferred from T_1 and T_2 to T_3 and T_4. It can be seen that from the firing angle α to π, the input voltage v_s and input current i_s are positive so the energy flows from the source to the load. However, during the period from π to $\pi + \alpha$, the input voltage v_s is negative and the

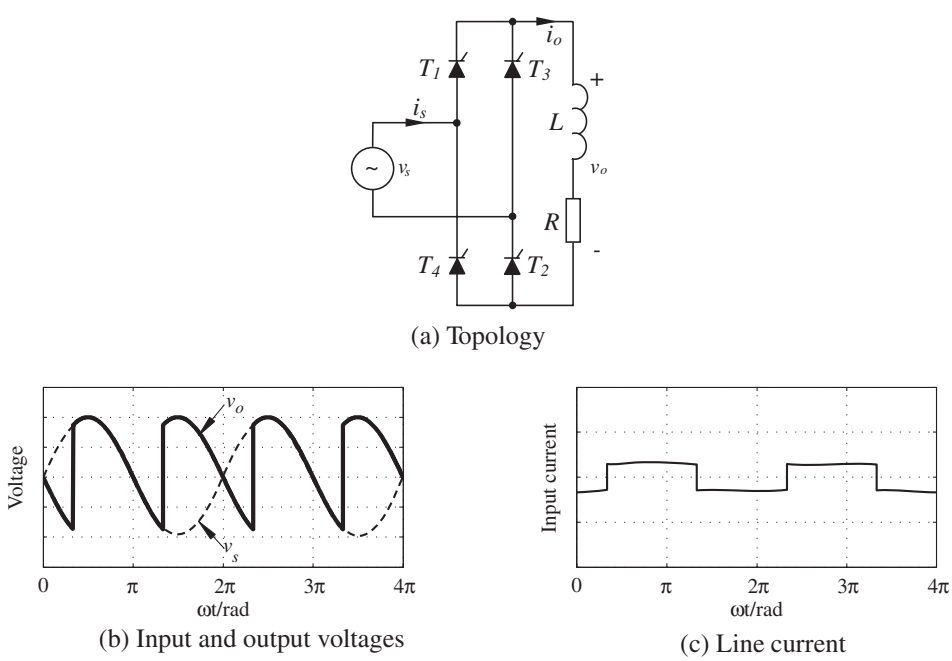

Figure 1.6 Phase-controlled rectifier with a large inductive load when $\alpha = \pi/3$

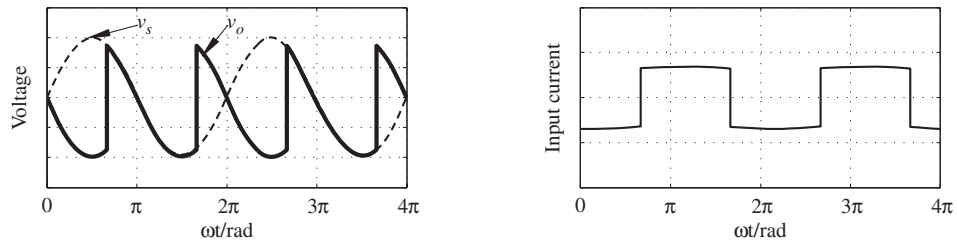

(a) Input and output voltages (b) Line current

Figure 1.7 Phase-controlled rectifier operated in the inversion mode when $\alpha = 2\pi/3$ with a negative DC bus voltage present

input current i_s is positive. Hence, the energy (stored in the large inductor) flows backwards. The DC output voltage is

$$V_o = \frac{1}{\pi}\int_{\alpha}^{\alpha+\pi} \sqrt{2}V_s \sin\omega t \mathrm{d}(\omega t) = \frac{2\sqrt{2}}{\pi} V_s \cos\alpha,$$

which can be varied from $\frac{2\sqrt{2}}{\pi}V_s$ to 0 when the firing angle α is changed from 0 to $\frac{\pi}{2}$. If the stored energy in the inductor is not enough to maintain a continuous current, then the current becomes discontinuous and the thyristors turn off. It is worth noting that the circuit can be operated in the inversion mode to feed energy to the grid if a negative voltage supply is present on the DC bus. In this case, α can be changed between $\frac{\pi}{2}$ and π. The waveforms when $\alpha = \frac{2\pi}{3}$ are shown in Figure 1.7.

For high power applications, three-phase bridge rectifiers with thyristors shown in Figure 1.8(a) are often adopted. The thyristors are fired at the firing angle α with the interval of $\pi/3$. When the firing signal is supplied to the corresponding thyristors that are forward biased, the corresponding line-to-line voltage is passed to the load. The output voltage waveforms when $\alpha = \pi/6$ and $\alpha = \pi/2$ are shown in Figures 1.8(b) and 1.8(c), respectively. The DC output voltage is

$$V_o = \frac{1}{\pi/3}\int_{\alpha+\frac{\pi}{6}}^{\alpha+\frac{\pi}{2}} \sqrt{2}\times\sqrt{3}V_s \sin(\omega t + \frac{\pi}{6})\mathrm{d}(\omega t) = \frac{3\sqrt{6}}{\pi} V_s \cos\alpha \approx 2.34 V_s \cos\alpha,$$

which can be varied from $\frac{3\sqrt{6}}{\pi}V_s$ to 0 when the firing angle α is changed from 0 to $\frac{\pi}{2}$. Similarly, when a negative DC voltage is present on the DC bus, the circuit can be operated in the inversion mode to send energy to the grid, as shown in Figure 1.9.

1.2.1.3 Diode Rectifiers Cascaded with a Boost Converter

The input currents of diode and phase-controlled rectifiers contain a significant amount of harmonics, which causes a low power factor as well. In order to obtain a variable output

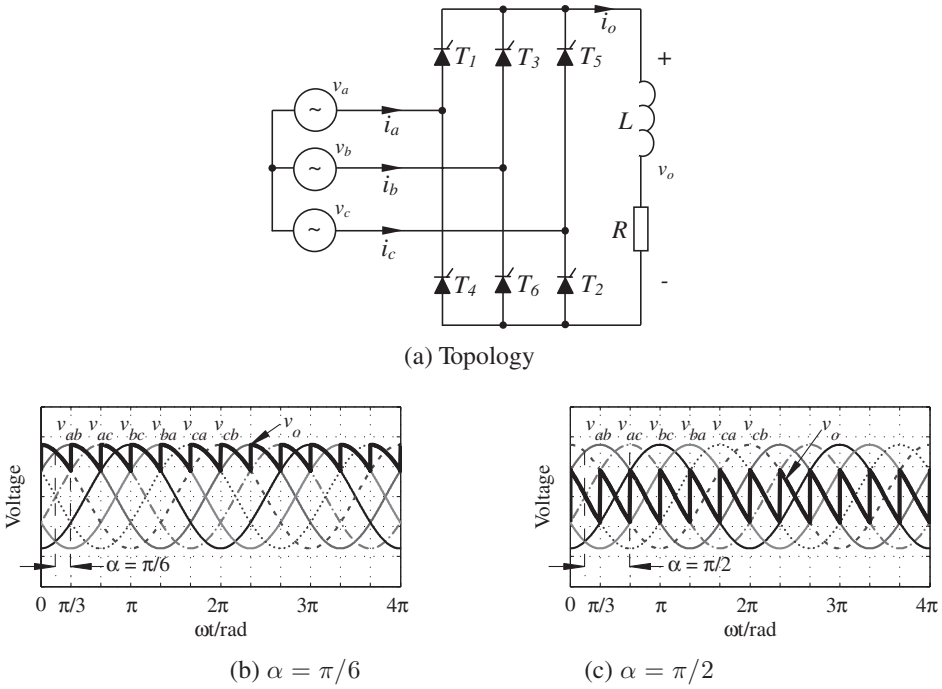

(a) Topology

(b) $\alpha = \pi/6$ (c) $\alpha = \pi/2$

Figure 1.8 Phase-controlled three-phase rectifier with a large inductive load

voltage and a high-quality input current at the same time, many techniques based on active current control have been developed (Bollen 2000; Sankaran 2002). One option is to cascade a boost converter at the output of a diode bridge rectifier, as shown in Figure 1.10(a). The boost converter can be controlled to make the input current in phase with the input voltage while regulating the output voltage, e.g. with the basic hysteresis control strategy shown in Figure 1.10(b). Although the load current is mainly of DC, the input current is sinusoidal and the

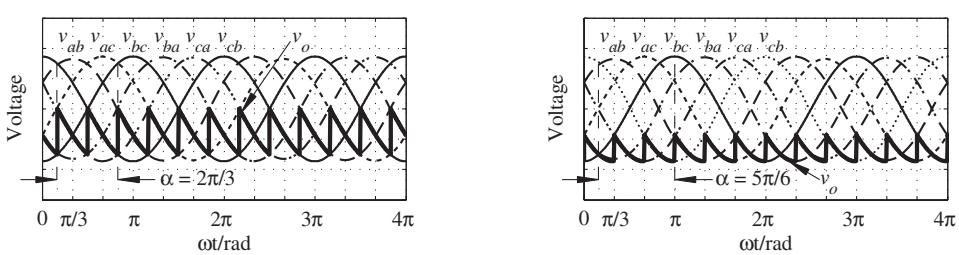

(a) $\alpha = 2\pi/3$ (b) $\alpha = 5\pi/6$

Figure 1.9 Phase-controlled three-phase rectifier operated in the inversion mode when a negative DC bus voltage is present

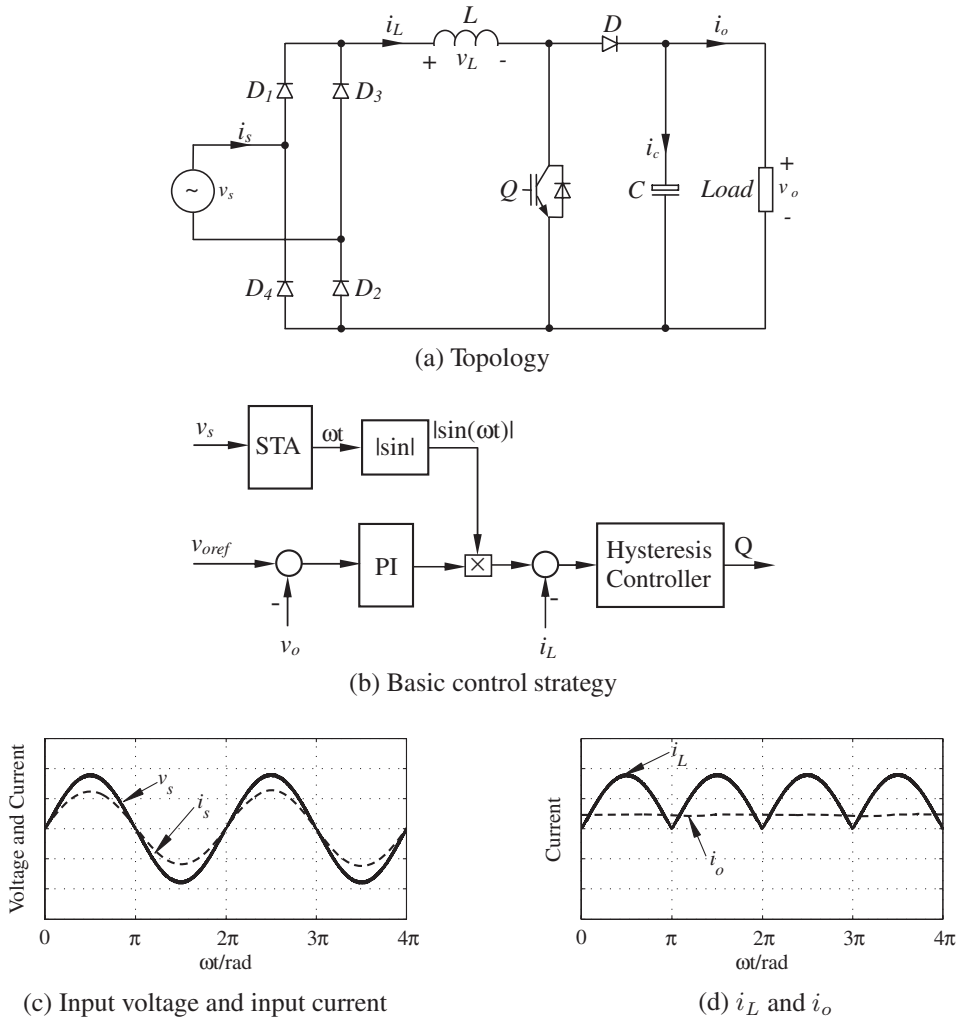

Figure 1.10 Diode rectifier cascaded with a boost converter

inductor current is a rectified full wave. Note that because of the boosted output voltage, the load current is less than the average of the inductor current.

The hysteresis controller produces PWM pulses to turn on/off the switch Q according to the difference between the current i_L and its reference, which is in phase with the output voltage of the diode rectifier (and hence the input voltage). As a result, the actual current i_L always tracks the reference current within a hysteresis band (Bose 2001) and the input current is in phase with the input voltage. The relevant curves are shown in Figures 1.10(c) and 1.10(d).

In order to obtain the phase information of the supply, an STA is adopted; see Chapter 22 for more details.

1.2.1.4 PWM-controlled Rectifiers

A diode rectifier cascaded with a boost converter is able to improve the quality of the input current but the power flow is unidirectional from the source to the load. In order to solve this problem, a bidirectional converter with fully PWM-controlled power switches can be adopted. A PWM-controlled rectifier can be operated as a rectifier or an inverter and the power can flow from the AC side to the DC side or from the DC side to the AC side, if there is energy available at the DC side.

Figure 1.11(a) shows a PWM-controlled single-phase H-bridge rectifier. It is basically operated as a boost converter so an inductor is connected to the input voltage side. A basic control strategy is shown in Figure 1.11(b), which makes the input current in phase with the

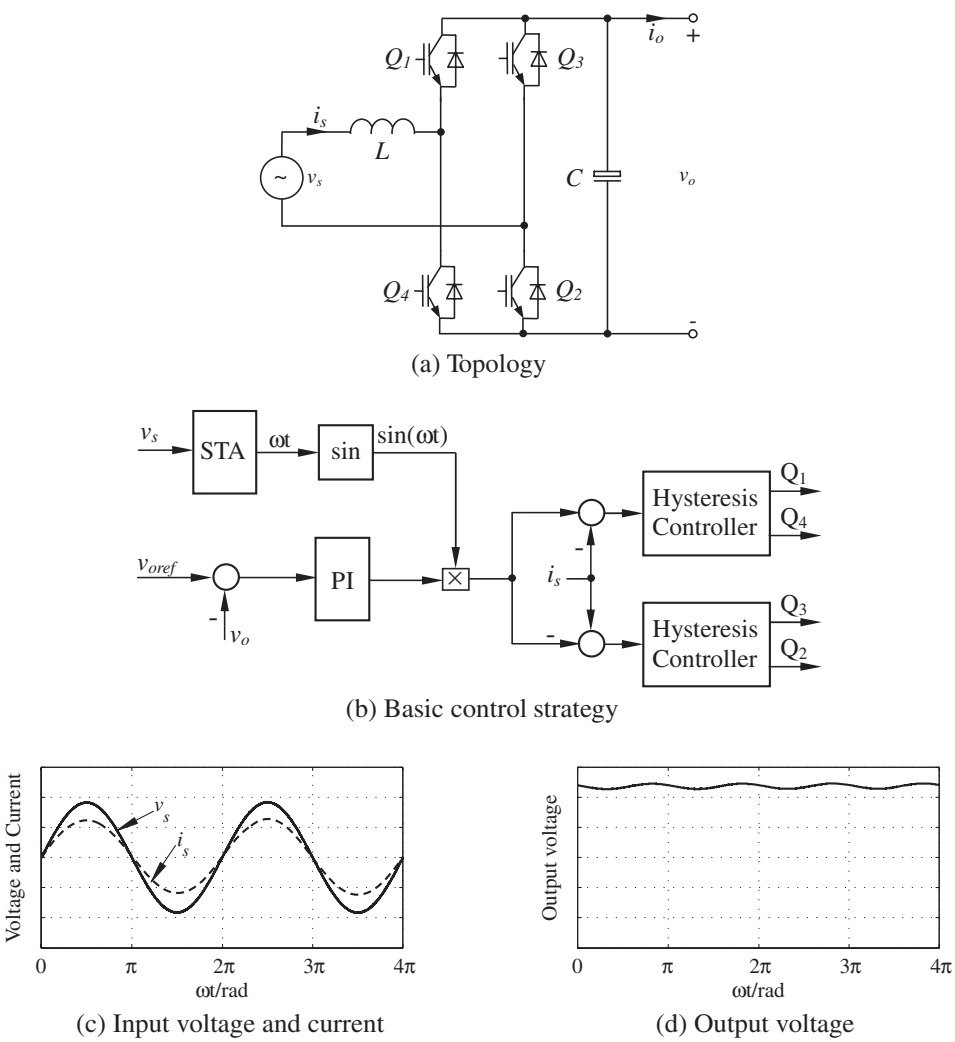

Figure 1.11 PWM-controlled single-phase full-bridge rectifier

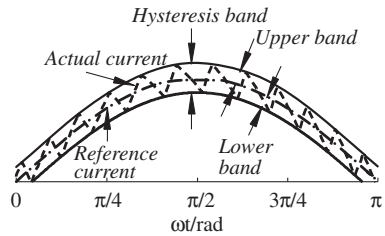

(a) Hysteresis band, actual and reference currents

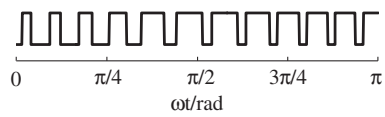

(b) Gate signal

Figure 1.12 Principle of hysteresis control

input voltage. The error between the reference output voltage v_{oref} and the actual voltage v_o is fed into a PI controller to generate the right amount of the current to be drawn from the source, which is multiplied with the per-unit input voltage $\sin(\omega t)$ as a synchronisation signal to generate the reference input current. The input current of the rectifier is controlled via a hysteresis controller to track the reference input current.

The principle of the hysteresis control is shown in Figure 1.12. When the actual current is below the lower boundary of a hysteresis band (HB) around the reference current, the upper switch is turned on and the lower switch is turned off, which causes the actual current to increase. When the actual current exceeds the upper boundary of the HB, the upper switch Q_1 is turned off and the lower switch Q_4 is turned on, which causes the current to decrease. As a result, the PWM signal for the upper switch Q_1 is generated as follows

$$Q_1 = \begin{cases} \text{ON} & \text{if } i < i_{ref} - \frac{1}{2}\,\text{HB}, \\ \text{OFF} & \text{if } i > i_{ref} + \frac{1}{2}\,\text{HB}. \end{cases}$$

The PWM signal for Q_4 is complementary and the PWM signals for Q_2 and Q_3 can be determined accordingly.

The relevant curves from the circuit are shown in Figures 1.11(c) and 1.11(d). It can be seen that the input current is in phase with the input voltage. The output voltage is maintained well although there are some ripples, which can be addressed with other mechanisms. It is worth noting that it is possible to control the power factor at other values by changing the phase of the synchronisation signal.

The same principle can be applied to a three-phase PWM-controlled rectifier shown in Figure 1.13(a), with a slightly changed control strategy shown in Figure 1.13(b) to accommodate the other two phases. The relevant curves are shown in Figures 1.13(c) and 1.13(d). All the three-phase currents are controlled to be sinusoidal and in phase with the corresponding phase voltages. Because the instantaneous power flowing into the converter is constant for a

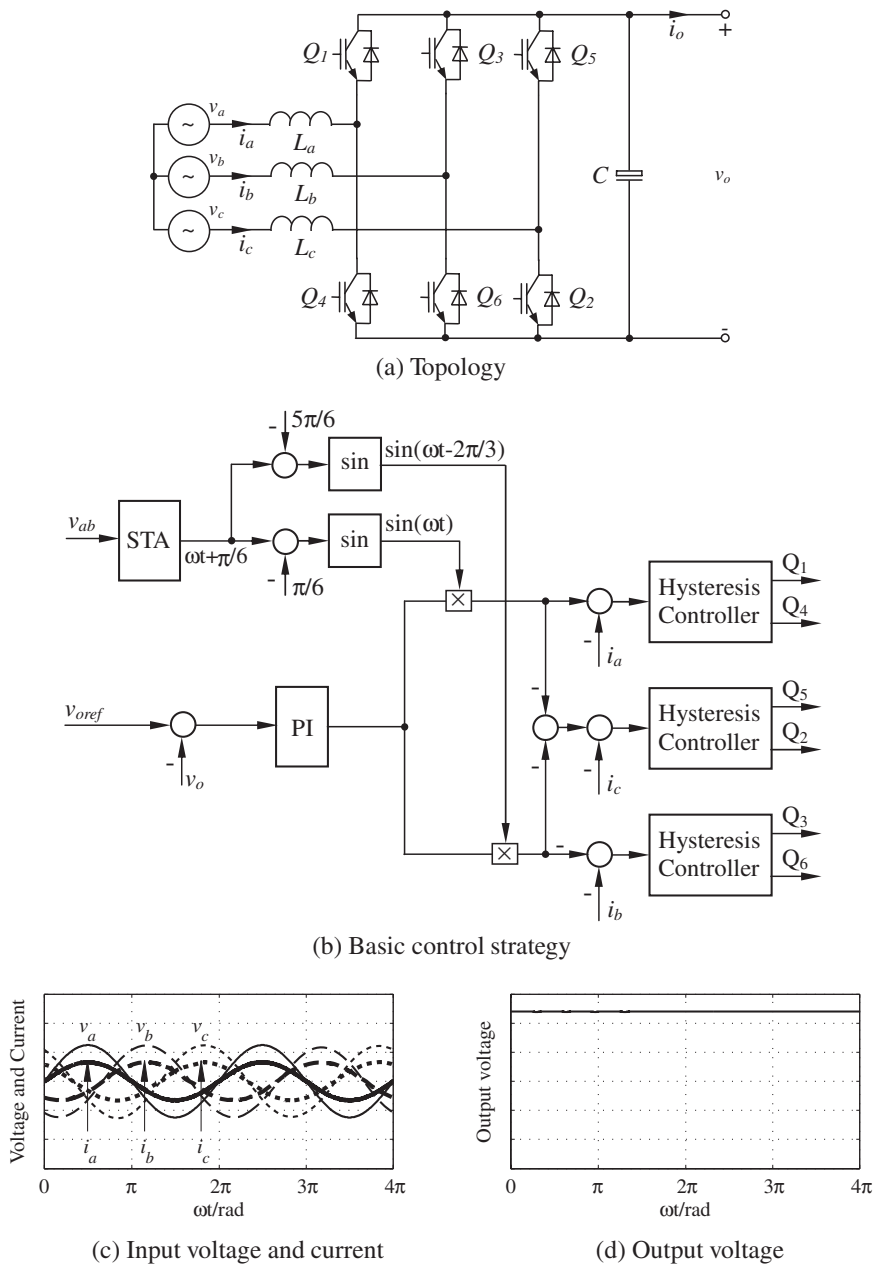

(a) Topology

(b) Basic control strategy

(c) Input voltage and current

(d) Output voltage

Figure 1.13 PWM-controlled three-phase full-bridge rectifier

three-phase system, the ripples of the output voltage shown in Figure 1.13(d) are much smaller than that in the single-phase system shown in Figure 1.11(d).

1.2.2 DC-DC Conversion

A DC-DC converter is used to change the voltage level of a DC source from one to another. According to the relationship between the input and output voltages, a DC-DC converter can be designed to reduce the voltage level, to increase the voltage level, or both. The ratio between the output voltage and the input voltage is called the conversion ratio α. When it is lower than 1, the converter is called a buck converter; when it is higher than 1, the converter is called a boost converter; when it can be higher or lower than 1, the converter is called a buck-boost converter (Mohan 2003; Rashid 1993).

1.2.2.1 Buck Converters

A buck converter is a step-down DC to DC converter. Figure 1.14 shows a typical buck converter, which consists of two switches (a transistor and a diode), an inductor and a capacitor.

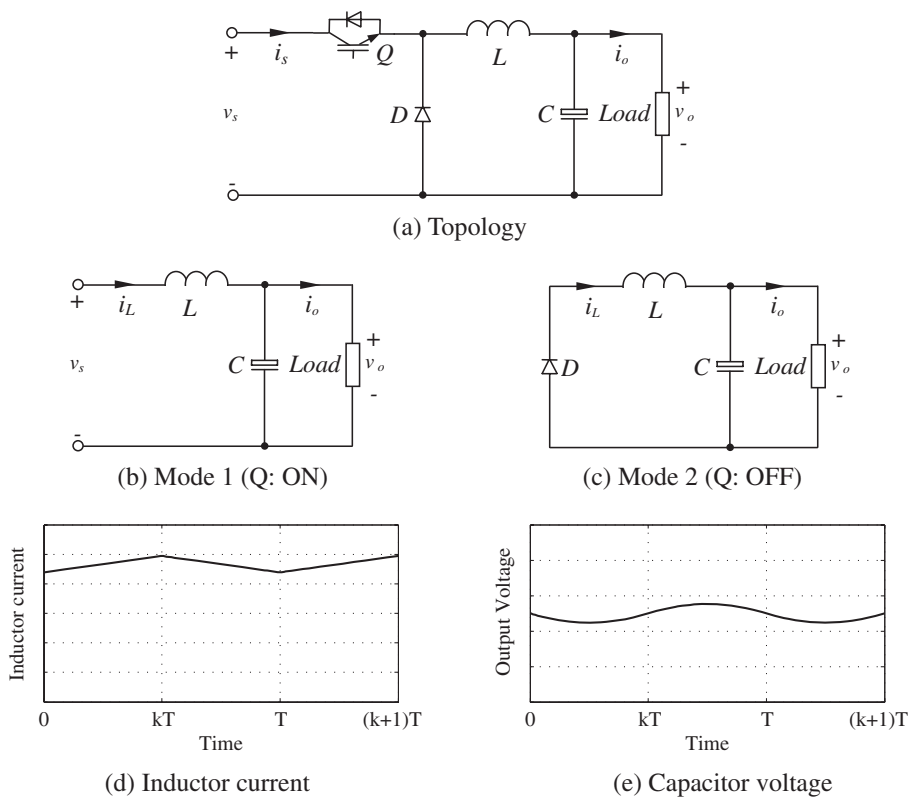

Figure 1.14 Typical buck converter

The inductor and the capacitor act as a filter to improve the quality of the output voltage and the load current.

The switch Q is turned on and off periodically. Assume that the switching period is T and the duty cycle is k. Then, the OFF time in one period is $(1-k)T$. The circuit has two operation modes: Mode 1 when the switch Q is turned ON and Mode 2 when the switch Q is turned OFF. The equivalent circuits in both modes are shown in Figures 1.14(b) and 1.14(c), respectively. During Mode 1, the inductor current i_L increases linearly because

$$L\frac{\mathrm{d}i_L}{\mathrm{d}t} = v_s - v_o,$$

where $v_s - v_o$ is almost constant and positive. During Mode 2, the inductor current freewheels through the diode and decreases linearly because

$$L\frac{\mathrm{d}i_L}{\mathrm{d}t} = 0 - v_o,$$

where $-v_o$ is almost constant and negative. The corresponding inductor current waveform is shown in Figure 1.14(d). Ideally, the ripple current should flow through the capacitor and the corresponding voltage waveform is shown in Figure 1.14(e).

In the steady state, the net energy changed in the inductor should be zero during one period, which means the current increased in Mode 1 should be equal to the current decreased in Mode 2. That is,

$$\frac{kT}{L}(v_s - v_o) = \frac{(1-k)T}{L}v_o.$$

Hence, the output voltage is

$$v_o = kv_s.$$

Indeed, this is a buck converter because $\alpha = k$.

1.2.2.2 Boost Converters

Figure 1.15(a) shows a typical boost converter. A boost converter is also called a step-up converter because the output voltage is higher than the input voltage. As a result, the output current is lower than the input current because of the power balance. Similarly, there are also two operation modes when the switch Q is turned ON and OFF. The equivalent circuits in these two modes are shown in Figures 1.15(b) and 1.15(c), respectively.

During Mode 1, the inductor current increases linearly because

$$L\frac{\mathrm{d}i_L}{\mathrm{d}t} = v_s - 0,$$

and the inductor stores energy from the power source while the capacitor discharges to supply the load. During Mode 2, both the energy stored in the inductor and from the power

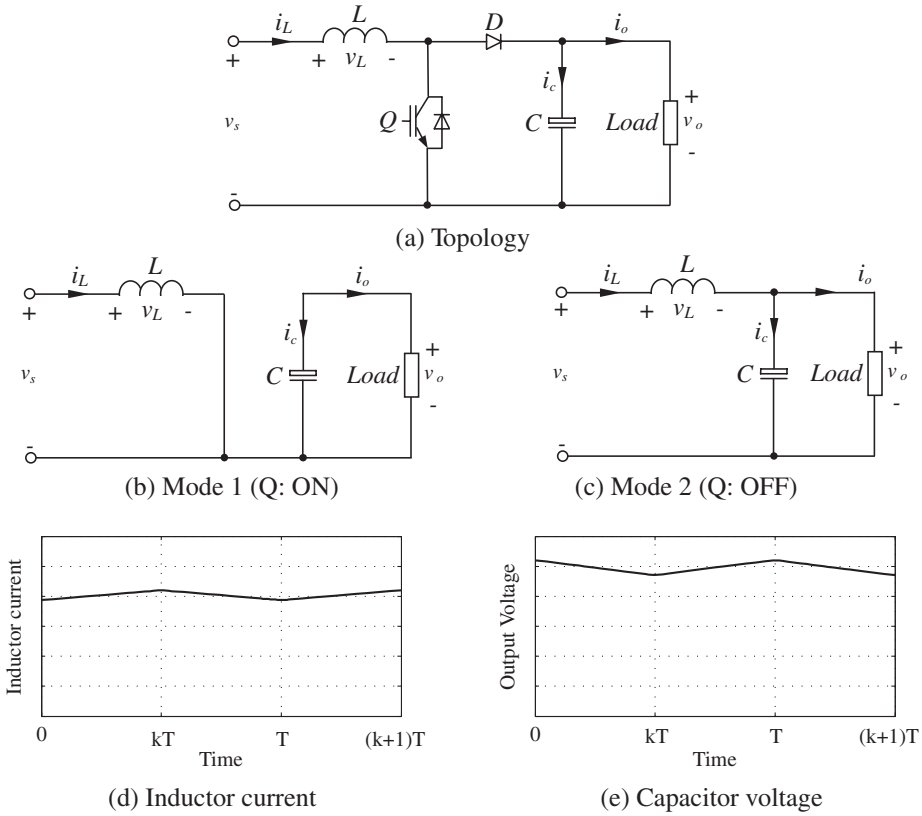

Figure 1.15 Typical boost converter

source are transferred to the load and the capacitor. The inductor current decreases linearly because

$$L\frac{\mathrm{d}i_L}{\mathrm{d}t} = v_s - v_o.$$

Similarly, the net energy changed in the inductor should be zero during one period in the steady state, which means the current increased in Mode 1 should be equal to the current decreased in Mode 2. That is,

$$\frac{kT}{L}v_s = \frac{(1-k)T}{L}(v_o - v_s),$$

from which the output voltage can be derived as

$$v_o = \frac{1}{1-k}v_s.$$

Indeed, this is a boost converter because $\alpha = \frac{1}{1-k} > 1$ for $k \in (0, 1)$. The waveforms of the inductor current and the capacitor voltage are shown in Figures 1.15(d) and 1.15(e), respectively.

1.2.2.3 Buck-Boost Converters

A typical buck-boost converter is shown in Figure 1.16(a). Note that the polarity of the output voltage is opposite to that of the input. Similar to the buck and boost converters discussed above, this converter has two operation modes. The equivalent circuits are shown in Figures 1.16(b) and 1.16(c), and the corresponding waveforms of the inductor current and capacitor voltage are shown in Figures 1.16(d) and 1.16(e). The output voltage is

$$v_o = \frac{k}{1-k} v_s.$$

It operates in the buck mode when $k < 0.5$ and in the boost mode when $k > 0.5$.

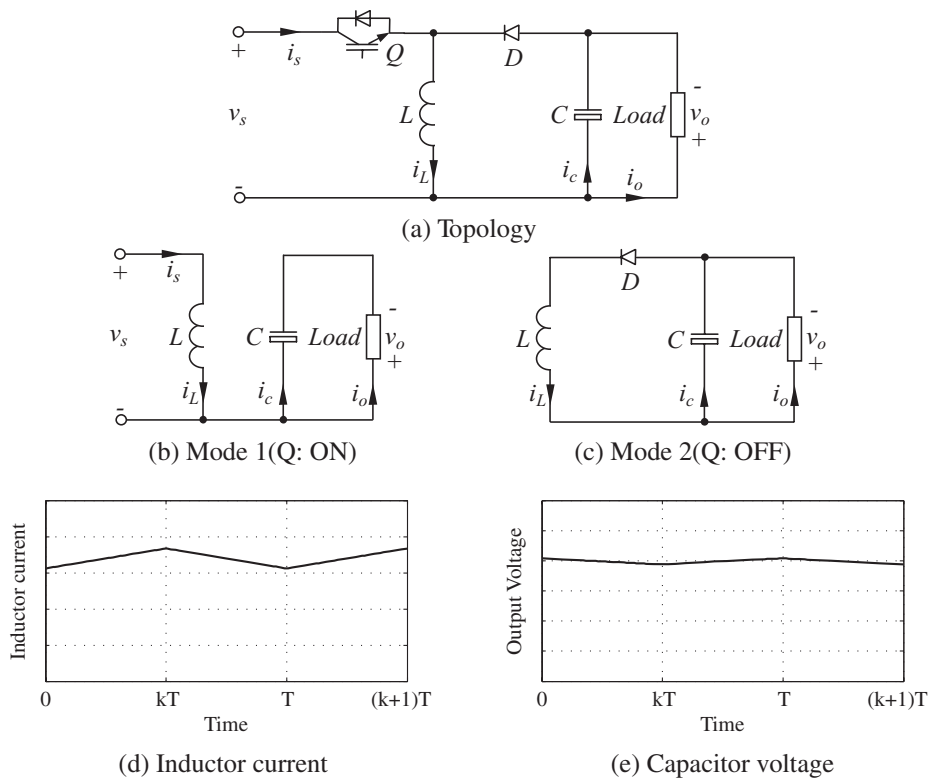

Figure 1.16 Typical buck-boost converter

1.2.3 DC-AC Conversion

A DC-AC converter, also known as an inverter, generates an AC output from a DC source. There are different types of inverters. According to the type of the DC supply, an inverter is known as a current-source inverter (CSI) if the supply is a current source and a voltage-source inverter (VSI) if the supply is a voltage source. Typically, an inverter is a VSI if there is a large capacitor across the DC bus and is a CSI if there is a large inductor in series with the DC supply. According to the type of the inverter output, an inverter is called current-controlled if the output is controlled to be a current source and voltage-controlled if the output is controlled to be a voltage source. Hence, there are current-controlled VSIs and voltage-controlled VSIs, and there are also current-controlled CSIs and voltage-controlled CSIs. The details of CSIs can be found from textbooks about power electronics, e.g. (Bose 2001), and will not be discussed in the rest of this book. The inverters dealt with in this book are all VSIs. According to the type of commutation, inverters can be line commutated (e.g. those built with thyristors) or forced commutated (e.g. those built with IGBT and MOSFET). In the rest of this book, only forced commutated inverters are dealt with. The output voltage waveform of a voltage-controlled VSI can be a square wave, a modified square/sine wave, multi-level or a pure sine wave. In the rest of this book, voltage-controlled VSIs are expected to have a purely sinusoidal voltage output with minimal harmonic components.

The amplitude of the output of an inverter can be fixed or variable. Moreover, the frequency can be fixed or variable as well, depending on the applications. These can be easily achieved with pulse-width-modulation (PWM) techniques. There are many different PWM techniques available (Asiminoaei *et al*. 2008; Cetin and Ermis 2009; Holmes *et al*. 2003; Holtz 1992, 1994; Lascu *et al*. 2007 2009; Wong *et al*. 2001). In this book, the focus is not on PWM techniques and the widely-used sinusoidal PWM is adopted in most cases. Note that the main objective of PWM is to change a signal with possibly variable amplitude into a train of pulses with variable widths to drive the switches. Hence, as long as the average of the pulses over one switching period well approximates the original signal, then it should not considerably affect the performance with a well-designed controller if the switching frequency is high enough, according to the averaging theory (Khalil 2001). When the switching frequency is not high enough, some particular PWM strategies should be adopted.

1.2.3.1 Sinusoidal PWM (SPWM)

Most inverters are required to provide a clean sinusoidal voltage supply with a fixed or variable frequency, which is normally much lower than the switching frequency. In this case, the desired clean sinusoidal output voltage, called the modulating signal, can be compared with a triangular carrier wave at the switching frequency to generate a train of pulses, as shown in the left column of Figure 1.17. The harmonic components of this signal are mainly around the multiples of the switching frequency. If the pulses are amplified to drive a VSI, then the output voltage of the inverter has the same shape. When the carrier frequency, i.e. the switching frequency, is high enough, then the harmonic components can be easily filtered out via a low-pass filter, which is often an LC or LCL filter. This type of modulation is called a sinusoidal PWM (SPWM). The frequency of the reference signal determines the frequency of the output voltage and its peak amplitude controls the modulation index and then in turn the

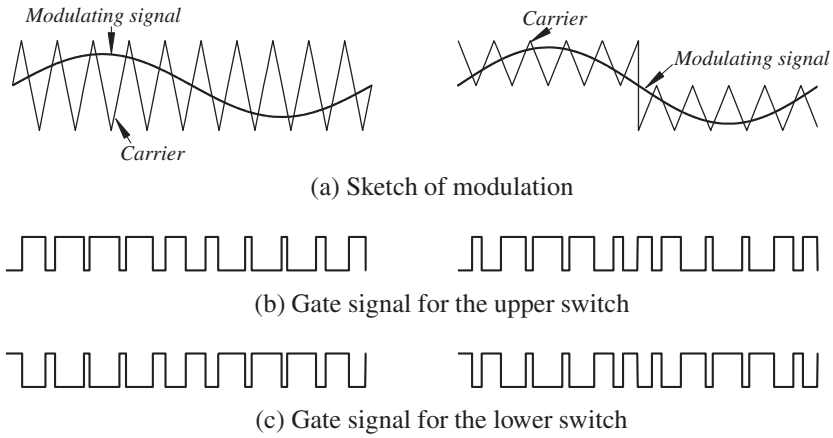

(a) Sketch of modulation

(b) Gate signal for the upper switch

(c) Gate signal for the lower switch

Figure 1.17 Sinusoidal PWM for a single-phase inverter: Bipolar (left column) and unipolar (right column)

RMS value of the output voltage. As a result, the amplitude and frequency of the output voltage can easily be changed by controlling the modulating signal. Because the carrier changes its sign during the positive or negative half cycle, this SPWM is bipolar. If the carrier does not change its sign during the positive or negative half cycle, then the resulting SPWM is unipolar, as shown in the right column of Figure 1.17. Note that in both cases, the upper switch and the lower switch on the same leg are operated in a complementary way.

Similarly, for three-phase applications, three modulating signals can be compared with the carrier signal to generate the gate-driving signals, as shown in Figure 1.18.

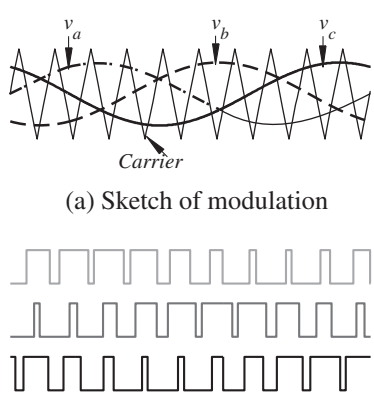

(a) Sketch of modulation

(b) Three-phase SPWM gate signals (for upper switches)

Figure 1.18 Sinusoidal PWM for a three-phase inverter

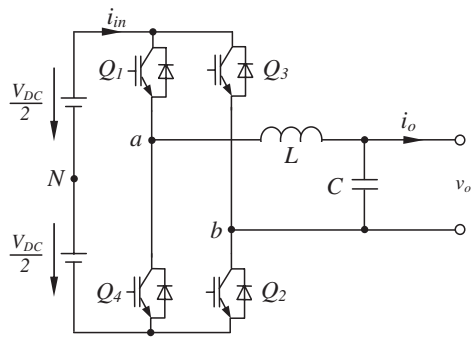

Figure 1.19 Single-phase voltage-source inverter

1.2.3.2 Operation of Single-phase Inverters

Figure 1.19 shows a single-phase inverter with a DC voltage source. The DC bus voltage is split into two halves to illustrate the operation of the inverter and the mid-point of the DC bus is the reference point for the two phase legs.

The inverter can be operated to obtain bipolar and unipolar SPWM signals for v_{ab}. When it is operated with the unipolar SPWM signal shown in the right column of Figure 1.17, the voltages v_{aN}, v_{bN}, together with v_{ab} and v_o are shown in the left column of Figure 1.20. In this case, phase-leg a is operated according to the unipolar SPWM signal and phase-leg b is operated according to the polarity of the voltage signal at its frequency. For example, when the modulating voltage u is positive, Q_1 and Q_4 are turned ON and OFF according to the unipolar SPWM signal while Q_2 is always ON and Q_3 is always OFF; when u is negative, Q_1 and Q_4 are turned ON and OFF according to the SPWM signal while Q_2 is always OFF and Q_3 is always ON. This is able to reduce switching losses because the second leg is operated at the frequency of the voltage.

It is possible to operate the inverter to obtain a unipolar SPWM for v_{ab} although the phase legs are driven by bipolar SPWM signals, as shown in the right column of Figure 1.20. In this case, the modulating voltage u and its opposite $-u$ are compared with the carrier waveform to generate two sets of bipolar SPWM signals to drive the two phase legs. As a result, the voltages v_{aN} and v_{bN} are 180° apart from each other. The voltage v_{ab}, which is the difference of the two voltages v_{aN} and v_{bN}, is unipolar at the doubled switching frequency. Since both phase legs are operated at the same high switching frequency, the switching losses are high but because the resulting v_{ab} has a doubled switching frequency, the output voltage quality is better than the case shown in the left column of Figure 1.20. In this case, the two phase legs are operated as two separate phases, which are 180° apart from each other.

When both legs of the inverter are operated with the bipolar SPWM shown in the left column of Figure 1.17, the resulting curves are shown in Figure 1.21. In this case, the same SPWM signal is sent to the two phase legs in a complementary way. That is, Q_1 and Q_2 are operated as a pair at the same time and Q_3 and Q_4 are operated as a pair at the same time. As a result, $v_{bN} = -v_{aN}$ and $v_{ab} = 2v_{aN}$.

Note that the amplitude of v_{ab} is $\pm V_{DC}$ for all three different operation modes and the maximum achievable amplitude is the same as the DC bus voltage.

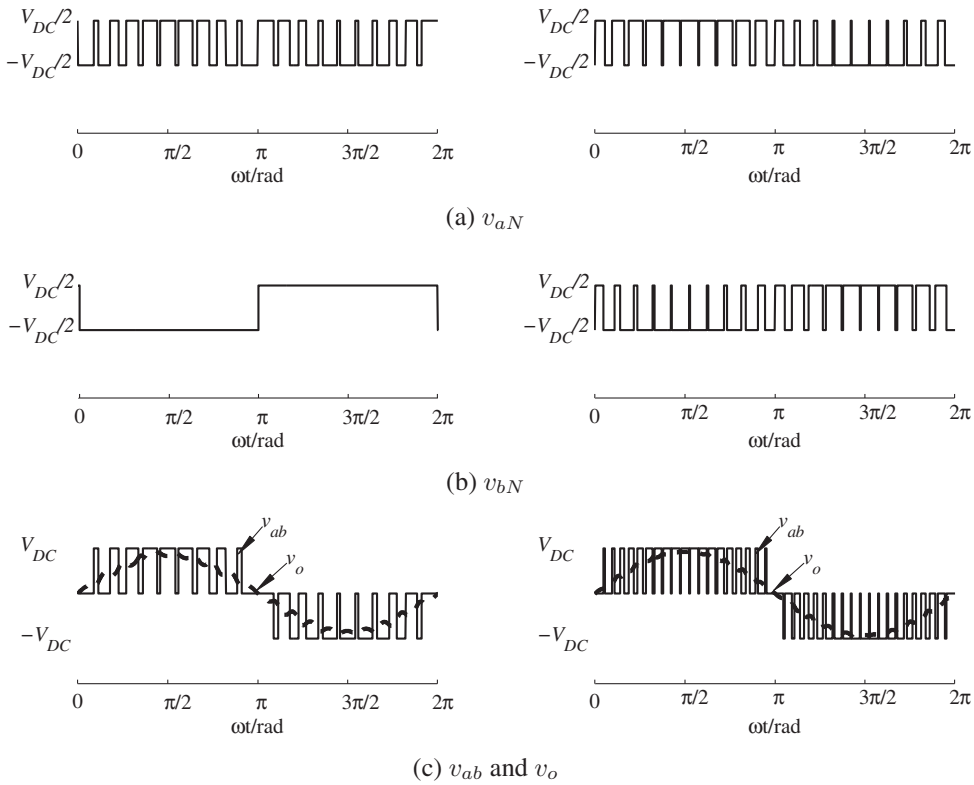

Figure 1.20 Unipolar operation of a single-phase inverter: with only one leg operated at the switching frequency (left column) and both legs operated at the switching frequency (right column)

1.2.3.3 Operation of Three-phase Inverters

For three-phase inverters shown in Figure 1.22(a), three phase voltages can be compared with the carrier waveform to generate three sets of bipolar PWM signals, as shown in Figure 1.18 to drive the three phase legs separately. The corresponding curves are shown in Figures 1.22(b) and 1.22(c). It can be seen that the maximum amplitude of the phase voltages is half of the DC-bus voltage. It is worth noting that the average voltage between the reference point N of the three phase legs and the common point N' of the capacitors over a switching period is 0 but the instantaneous voltage is not.

1.2.4 AC-AC Conversion

The AC-AC conversion can be performed indirectly via AC-DC-AC with the addition of a DC bus or directly without a DC bus. The indirect AC-AC conversion is basically the combination of AC-DC conversion and DC-AC conversion, as discussed in Sections 1.2.1

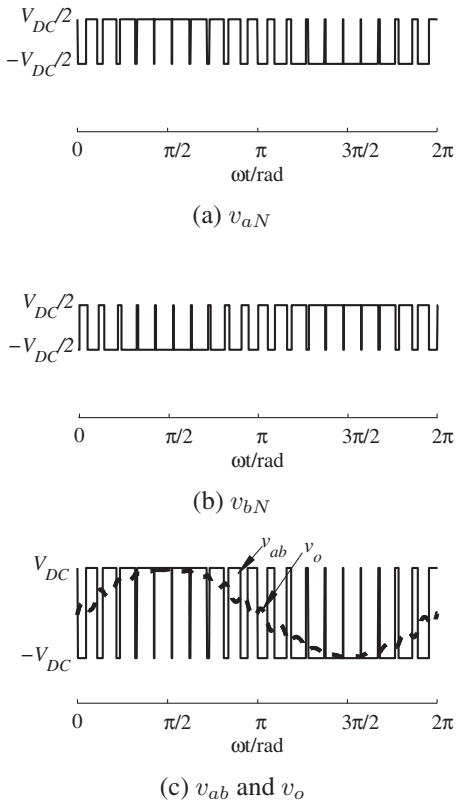

Figure 1.21 Bipolar operation of a single-phase inverter

and 1.2.3 and, hence, will not be discussed any further. The direct AC-AC conversion often involves bidirectional switches, e.g. triacs and thyristors connected in anti-parallel. One way to implement direct AC-AC conversion is to use matrix converters to generate AC outputs with arbitrary amplitude and frequency; see e.g. (Rodriguez *et al*. 2012; Wheeler *et al*. 2002). Here, the circuit shown in Figure 1.23(a) is illustrated with two major control methods: on–off control and phase control.

1.2.4.1 On–off Control

Figure 1.23(a) shows a single-phase AC-AC converter. Two thyristors are connected in anti-parallel so when they are triggered, both half cycles of the supply can be passed to the load. When it is under the on–off control, triggering pulses are provided to turn on the thyristors so that the supply is passed to the load. The thyristors are turned off when the supply is not passed to the load. Assume that the ratio of the number of ON-cycles to the number of total cycles in an operational period is k and the RMS value of the supply is V, then the RMS value of the output voltage is $\sqrt{k}V$ and the input power factor is $\sqrt{k}$. For the input voltage sketched in

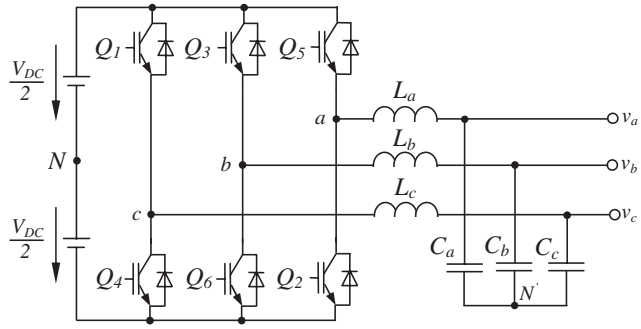

(a) Topology

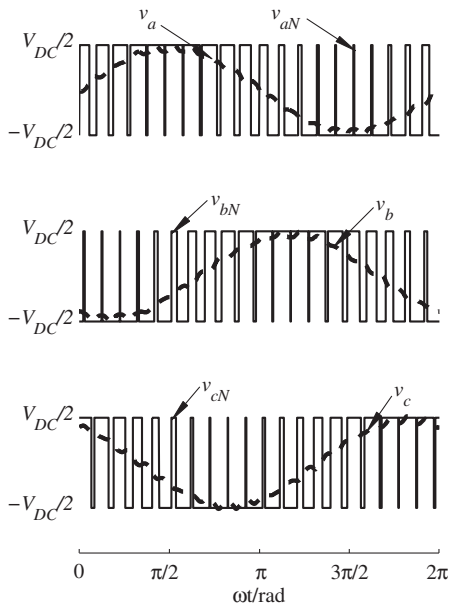

(b) v_{aN}, v_{bN}, v_{cN} and the three-phase voltages v_a, v_b and v_c

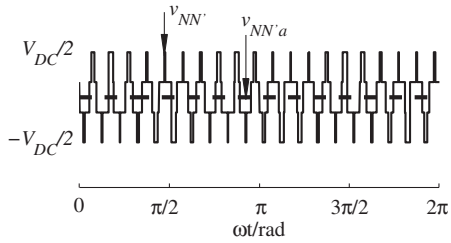

(c) $v_{NN'}$ and its average $v_{NN'a}$ over a switching period

Figure 1.22 Operation of a three-phase inverter

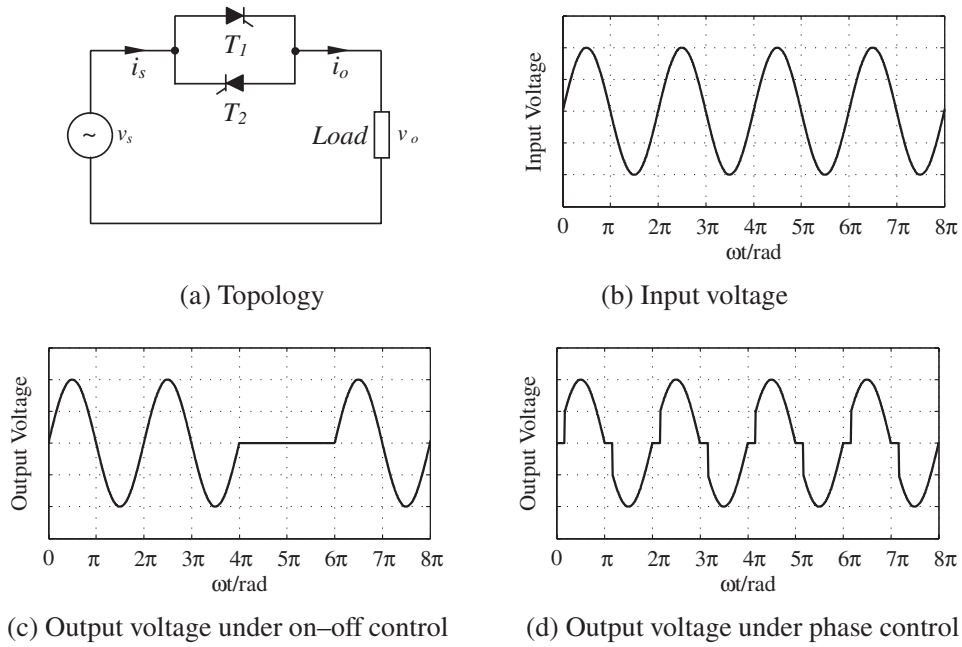

(a) Topology (b) Input voltage

(c) Output voltage under on–off control (d) Output voltage under phase control

Figure 1.23 Single-phase AC-AC converter

Figure 1.23(b), the output voltage is sketched in Figure 1.23(c) when the number of off-cycles is one. Note that the thyristors are triggered when the input voltage crosses 0.

1.2.4.2 Phase Control

For the same circuit shown in Figure 1.23(a), it is possible to control the phase when both half cycles are turned on by triggering the thyristors at the right time. There is not much difference from the case with thyristor rectifiers, apart from the fact that both half cycles can be passed to the load. For the input voltage sketched in Figure 1.23(b), the output voltage is sketched in Figure 1.23(d) for a firing angle of $\frac{\pi}{6}$ rad. It can be seen that there are harmonics in the output voltage and the switches are not triggered when the voltage crosses 0.

1.3 Hardware Issues

A power inverter mainly consists of power stages, an electronic controller and the necessary auxiliary circuits for isolation, output filtering, voltage and current sensing, signal conditioning and protection, etc. The functional block diagram of an inverter is shown in Figure 1.24. In this section, some general guidelines are provided and the readers are suggested to refer to handbooks about hardware design (FUJI 2004; Kimmel and Gerke 1995; Rashid 2010; Skvarenina 2002; TI 2011).

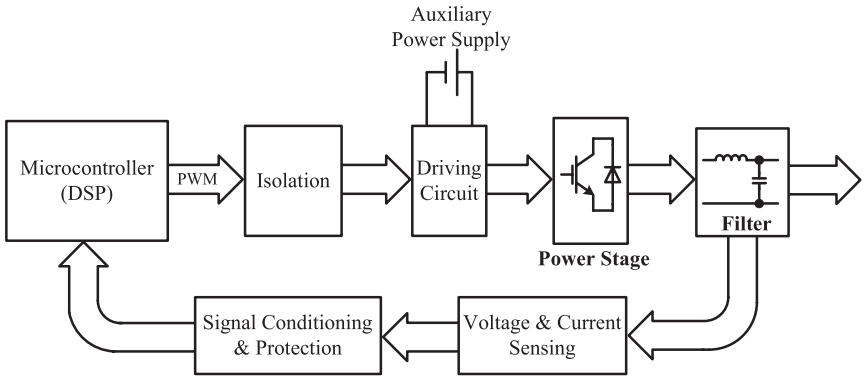

Figure 1.24 Block diagram of an inverter system

1.3.1 Isolation

In order to guarantee proper operation, the low-power-low-voltage electronic part of an inverter should be isolated from the high-power-high-voltage part. The isolation from the power part to the electronic part is often taken care of by the sensors. The isolation from the electronic part to the power part is often done to the PWM signals before entering the driving circuit, as shown in Figure 1.24. This can be easily done with optocouplers.

TLP550 is an optocoupler commonly used in the drivers for IGBT (Toshiba 2002), with a typical circuit shown in Figure 1.25. The PWM signal from a signal buffer/driver, e.g. SN74AB541, which processes the PWM signals of the Digital Signal Processor (DSP) from 3.3 V to 5 V, is connected to the cathode of the diode of the optocoupler to generate an isolated output signal PWM_Drive, which can be connected to the driving circuits. The truth table of the circuit shown in Figure 1.25, together with the logic for the operation of the IGBT, are given in Table 1.1, where PWM_DSP means the PWM signal from DSP ports. In order to avoid the damage caused by the high-impedance state of the DSP ports during reset, the ports can be pulled up with resistors. Hence, the high-impedance state of a port is equivalent to the OFF state. Note that an IGBT is turned on when the PWM signal is 0 in this case.

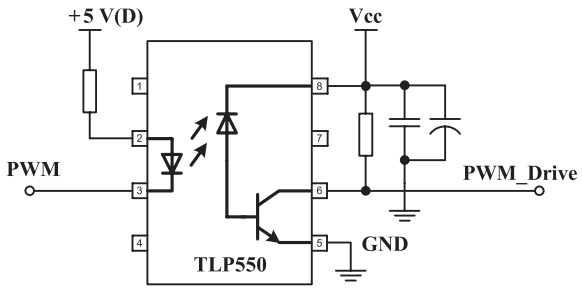

Figure 1.25 Typical circuit for TLP550. *Source:* Toshiba 2002

Table 1.1 Operational logic of the TLP550 shown in Figure 1.25

PWM_DSP	PWM	Output transistor	PWM_Drive	IGBT
1	1	OFF	1	OFF
0	0	ON	0	ON
High-Impedance State	1	OFF	1	OFF

It is worth noting that efforts should be made to minimise the difference between the driving channels, in particular, the channels for the switches on the same leg, because of the high speed of operation.

1.3.2 Power Stages

Power stages are the key part of an inverter system and are responsible for power transfer and conversion. Proper design and selection of power modules and the associated auxiliary circuits are crucial for the normal operation, reliability, lifetime and efficiency of the inverter.

1.3.2.1 Power Modules

With the development of power semiconductor technologies, power switches have experienced several stages. At present, discrete IGBT/MOSFET components and power modules built with IGBTs are commonly used in inverters. These devices are fully on–off controllable and are ideal for inverters.

Figure 1.26 shows the equivalent circuit of an ideal IGBT, which is the combination of a power transistor and a MOSFET. As a result, an IGBT combines the advantages of transistors (low conduction loss) and MOSFET (high-speed turn-on and easy drive with a low-power voltage signal). When a positive voltage is applied between the gate and the emitter, the MOSFET is turned on and hence the transistor is on. When the voltage is removed, the MOSFET is off and hence the transistor is off.

The current and voltage ratings of the IGBTs in an inverter should be selected appropriately to meet the requirements on the power and voltage levels. Moreover, discrete IGBT modules should be protected from over-currents, over-voltages, over-heating, etc. Because of the losses, heat sinks are often needed and should be designed appropriately to keep the junction temperature of the IGBT module below the maximum allowable value. Some guidelines can often be found in the product manuals, e.g. (FUJI 2004).

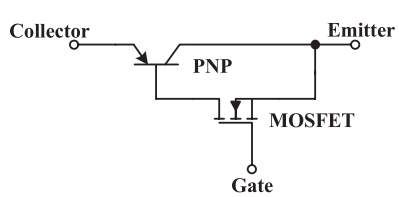

Figure 1.26 Equivalent circuit of an IGBT

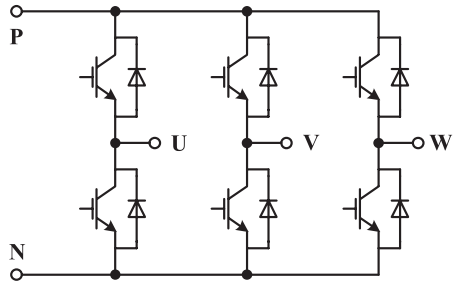

Figure 1.27 Schematic of a typical IPM

Another option is to use power modules, within which driving circuits and protection circuits are integrated with power switches. For example, intelligent power modules (IPM) include short-circuit protection and fault-detecting circuits, such as over-voltage, over-current and over-heat, in addition to driving circuits (POWEREX 2000). Due to the integrated package of the driving circuit and the power switches, the reliability and the dynamic response are considerably improved and the losses are reduced as well. The schematic of a typical power module with three phase legs is shown in Figure 1.27.

It is worth noting that the energy causing high transient voltages is $\frac{1}{2}Li^2$, which is proportional to the line inductance L and the square of the current i. Hence, the inductance of the DC buses should be designed as small and laminated bus structures are often adopted for high-current applications.

1.3.2.2 Auxiliary Power Supplies

In order to drive the switches in an inverter, isolated auxiliary power supplies are often needed. For example, for the circuit shown in Figure 1.27, the driving circuits for the three ground-connected power switches can share one power supply but the driving circuits for the three upper switches should be isolated and hence four isolated power supplies are needed. When selecting auxiliary power supplies, particular attention should be paid to their capacity to make sure that the driving current provided is enough to turn on the switches. Moreover, for each power supply to a particular driving circuit IC, a high-frequency filter capacitor and an electrolytic capacitor should be connected in parallel to the power supply of the IC, and as close as possible.

1.3.2.3 Driving Circuits

For a power semiconductor device, a driving circuit is needed to provide the right voltage level and driving current. For example, the required voltage level for IGBT is often 15 V or 20 V. Many IC companies have developed IC products to drive IGBTs at different power levels, which differ in terms of the switching frequency, current and voltage levels, etc.

The IR21xx series of drivers produced by International Rectifier (IR) are a typical set of high voltage, high speed MOSFET and IGBT drivers with independent high and low side

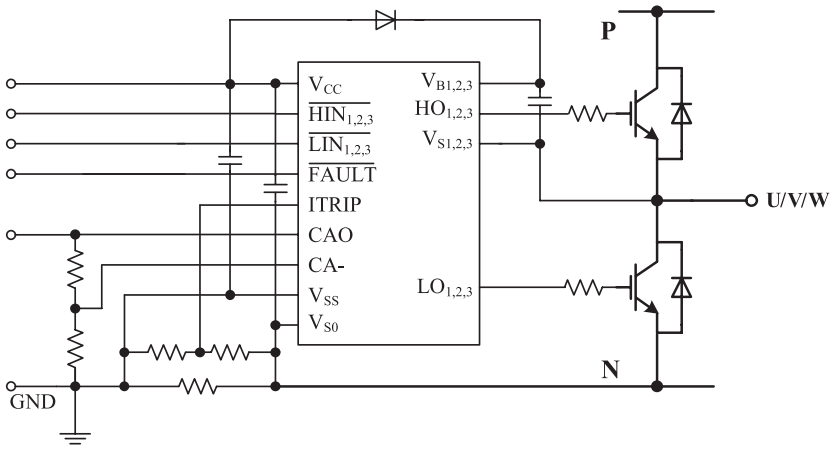

Figure 1.28 Typical connection of IR2130. *Source:* IR 2004

referenced output channels (IR 2004). IR2110 is suitable for one phase leg and IR2130 is suitable for three phase legs. Figure 1.28 shows the typical connection of IR2130 (IR 2004). Proprietary HVIC technology enables ruggedised monolithic construction. The logic inputs are compatible with CMOS or LSTTL outputs, down to 2.5 V logic. A ground-referenced operational amplifier provides analog feedback of the bridge current via an external current-sensing resistor, from which a current trip function that terminates all six outputs is also derived. An open drain $\overline{\text{FAULT}}$ signal is provided to indicate that an over-current or under-voltage shutdown has occurred. The output drivers feature a high pulse current buffer stage designed for the minimum driver cross-conduction. Propagation delays are matched to simplify use at high frequencies. The floating channels can be used to drive N-channel power MOSFETs or IGBTs in the high side configuration, which operate up to 600V.

Figure 1.29 shows a typical connection of the driving signal to the gate of an IGBT. In order to weaken the influence of the Miller capacitance and the stray inductance, turn-on and turn-off

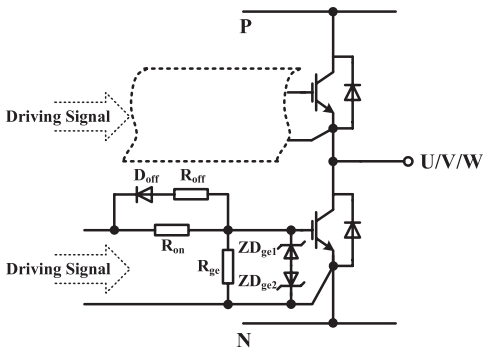

Figure 1.29 Typical connection between the gate and the emitter of an IGBT

resistors are connected between the driving signal and the gate of the IGBT. Moreover, zener didoes are connected across the gate and the emitter of the IGBT to prevent excessive driving voltage. If the driving signal does not offer an off bias with a negative voltage to speed up the turn-off process, then ZD_{ge2} is not needed. The selection of the turn-on and turn-off resistors is determined by the ratings of the IGBT. Generally, $R_{on} > R_{off}$ should be recommended to avoid a false turn-on of the IGBT caused by the Miller effect. Because the collector of the IGBT is connected to a high voltage, a resistor R_{ge} is connected across the gate and the emitter of the IGBT to avoid a false trigger caused by external high-voltage interference. This resistance should not be too small. Otherwise the gate voltage would not be high enough to trigger the IGBT and the peak voltage on the collector would also be high. Normally, this resistor is placed as close as possible to the gate and the emitter of the IGBT with $R_{ge} = 10\ k\Omega$ (FUJI 2004).

The ground of a driving circuit is connected to the emitter of the driven IGBT. Due to the line leakage inductance, there is an induced voltage between the ground-connected point and the emitter, especially in high-current applications because of the high di/dt during switching (POWEREX 2000). Therefore, the ground point of the gate signal should be connected to the emitter of the IGBT, as close as possible. Moreover, an off bias with a negative voltage V_{EE} should always be adopted. Figure 1.30(a) shows a circuit that is suitable for low-current six-pack devices, in which the power switches are integrated with minimal inductance on the negative bus and low di/dt. However, this circuit has a ground loop problem for high-current applications because the ground of the driving circuits is far from the emitters of the switches. Figure 1.30(b) shows a circuit with a common power supply for the driving circuits but with separate capacitors for each power switch, where the emitter of the switch is connected to the ground of the corresponding capacitor. This is suitable for modules rated up to 200 A. Figure 1.30(c) shows a circuit with isolated power supplies for switches with a common ground. This is recommended for IGBT modules rated 300 A or more. Because isolated power supplies are adopted, the ground loop problem is avoided.

1.3.2.4 Snubber Circuits

Power semiconductor switches are the main devices for an inverter and should be operated under safe working conditions. Snubber circuits should be placed across these devices to protect them and improve the system performance. The main functions of snubber circuits include (Severns n.d.):

1. Shaping the load line to keep it within the safe operating area (SOA).
2. Reducing or eliminating voltage or current spikes.
3. Limiting di/dt and dv/dt.
4. Reducing total losses due to switching.
5. Reducing EMI by damping voltage and current ringing.
6. Transferring power dissipation from the switch to a resistor or a useful load.

Table 1.2 shows three typical snubber circuits, together with the main features, for individual switches. Some snubber circuits can also be connected as close as possible between the collector of the upper IGBT and the emitter of the ground-connected IGBT to form lump

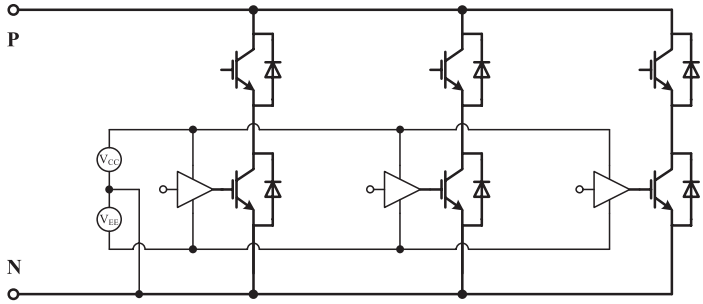

(a) For low-current applications

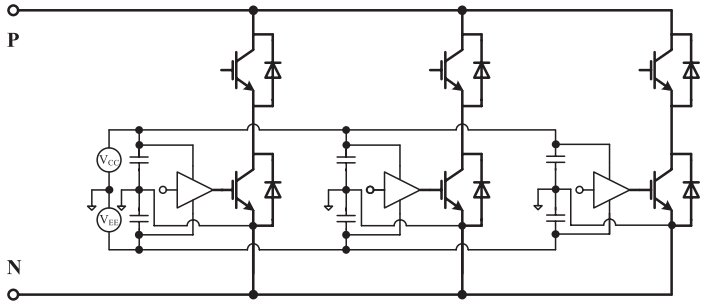

(b) For medium-current applications

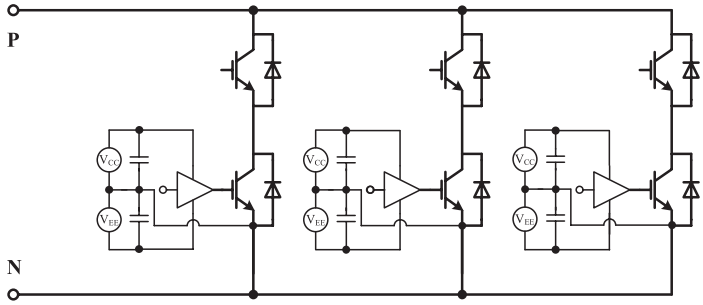

(c) For high-current applications

Figure 1.30 Ground connection of driving circuits. *Source:* POWEREX 2000

snubber circuits. Two such circuits, the RCD snubber circuit and the C snubber circuit, are shown in Figure 1.31. This is becoming increasingly popular due to the circuit simplification (FUJI 2004).

Note that the wiring inductance of snubber circuits is one of the main reasons for voltage spikes and, hence, the circuit should be built with the lowest possible inductance. The detailed design of snubber circuits can be found in (FUJI 2004; POWEREX 2000). Here, the design of the charge and discharge RCD snubber circuit, which is common in medium-power

Table 1.2 Typical individual snubber circuits

Snubber circuits	Features
RC snubber circuit 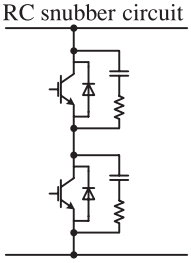	• Useful for controlling the transient voltage, parasitic oscillations and dv/dt • Not suitable for high-frequency applications because the resistor always consumes energy during the turn-ON and turn-OFF processes of the corresponding IGBT and the loss is quite high
Charge and discharge RCD snubber circuit 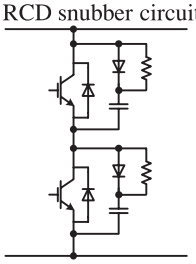	• The effect on the turn-off surge voltage is moderate • Not suitable for high-frequency applications • Power loss is $$P = \frac{1}{2}LI^2 f + \frac{1}{2}CV_d^2 f,$$ where L is the wiring inductance of the main circuit, I is the collector current at turn-off, C is the snubber capacitance, V_d is the DC bus voltage and f is the switching frequency. It could be high because the capacitor is charged and discharged during every switching cycle.
Discharge-suppressing RCD snubber circuit 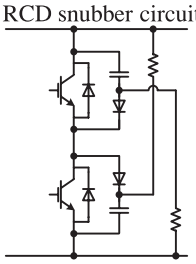	• The effect on the turn-off surge voltage is small • Suitable for high-frequency applications • Power loss caused by the snubber circuit is $$P = \frac{1}{2}LI^2 f$$ where L is the wiring inductance of the main circuit, I is the collector current at turn-off and f is the switching frequency.

Source: FUJI 2004; POWEREX 2000.

applications is described, according to (FUJI 2004; Hossain *et al*. 1997a, b; Todd 2001). The snubber capacitance can be calculated (Todd 2001) as

$$C_s = \frac{LI^2}{\Delta V\,(\Delta V + 2V)}, \tag{1.1}$$

where L is the line inductance of the power circuit and I is the current flowing through the power switch at the time it turns off. V and ΔV are the initial voltage and voltage change on

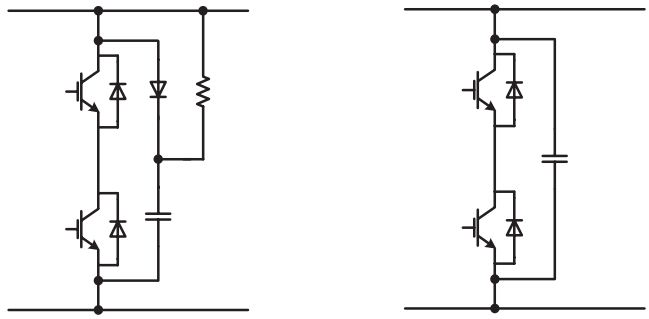

(a) RCD snubber circuit (b) C snubber circuit

Figure 1.31 Lump snubber circuits. *Source:* FUJI 2004; POWEREX 2000

the capacitor, respectively. In practice, V is 0 and ΔV equals the acceptable overshoot of the voltage across the power switch and can be expressed as

$$\Delta V = k_m V_{CEm} - V_d,$$

where V_{CEm} is the maximum C-E withstood voltage of the power switch and V_d is the DC power supply voltage, respectively. The coefficient k_m is less than 1, often 0.7–0.8 depending on the particular IGBT, to make sure that the maximum voltage $V_d + \Delta V$ is below the rated voltage. The selection of the snubber resistance often depends on the reverse-recovery current of the freewheeling diode and the minimum snubber resistance R_{s_min} can be obtained empirically (Hossain *et al*. 1997a) as

$$R_{s_min} = \frac{V_d}{k_s I},$$

where k_s, $0 < k_s \leq 0.2$, is the reverse-recovery factor of the freewheeling diode.

1.3.2.5 Shoot-through of Phase Legs

Power switches cannot be turned ON or OFF instantaneously, although the process is very fast. In order to avoid shoot-through between the upper and the lower switches of the same phase leg, a short period of dead time is needed between the two gate signals. It can be set in the controller, e.g. directly in a DSP or in a CPLD/FPGA chip. It can also be implemented with deadtime generator ICs. For example, IXDP630/631 are able to inject the required deadtime to convert a single-phase PWM signal into two separate logic signals required to drive the upper and lower switches in a PWM inverter. It also provides functions for output disable, and fast over-current and fault condition shutdown (IXYS 1998).

Although it is important to make sure that no shoot-through happens, it is also important to note that excessive deadtime may deteriorate the performance, e.g. increased harmonics, etc. It is also important for the deadtime to be applied symmetrically to the ON and OFF states to minimise the DC component in the output voltage.

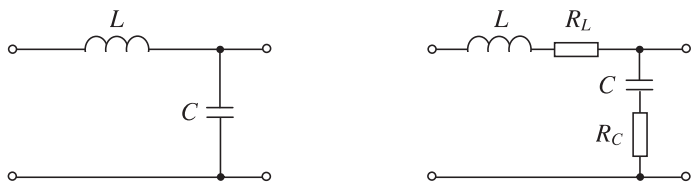

(a) without considering the ESRs (b) with the ESRs considered

Figure 1.32 Circuit model of a passive LC filter

1.3.3 Output Filters

Since an inverter is operated with PWM signals, which contain harmonics often around the multiples of the switching frequency, it is necessary to connect a low-pass filter to the output of the inverter power switches so that the harmonics can be filtered out and the desired output voltage is recovered. This can be done with conventional passive filters (Chang *et al*. 2006; Das 2004; Hamadi *et al*. 2010), e.g. LC and LCL filters.

1.3.3.1 LC Filters

The circuit model of a passive LC filter is shown in Figure 1.32. The equivalent series resistance (ESR) of the inductor and the capacitor may not be considered during the design process because of their small values. In practice, the ESRs are able to dampen high-frequency oscillations so it is good for performance. Ideally, the smaller the inductance and the capacitance, the more cost-effective the system. However, the inductance and the capacitance should be big enough in order to filter out the switching effects, taking into account several contradictory factors (Pasterczyk *et al*. 2009), e.g. the cut-off frequency f_c (Hatua *et al*. 2012; Michels *et al*. 2006), size, the voltage THD, the cost function (Dewan and Ziogas 1979; Dewan 1981; Kim *et al*. 2000), the resonance damping, efficiency (Strom *et al*. 2011) and the power level, etc.

The cut-off frequency f_c of the filter is

$$f_c = \frac{1}{2\pi\sqrt{LC}}. \tag{1.2}$$

This is the most important factor to be considered. In order to filter out the switching harmonics, it should be much lower than the switching frequency while providing enough bandwidth for the controller. It is recommended to position it within $\frac{1}{3} \sim \frac{1}{2}$ of the switching frequency f_{sw} (Hatua *et al*. 2012), i.e.

$$\frac{f_{sw}}{3} \leq f_c \leq \frac{f_{sw}}{2}. \tag{1.3}$$

It is worth noting that this causes resonance in the output impedance of the inverter around the cut-off frequency. As will be discussed in Chapters 2 and 7, this actually amplifies the harmonic current components around the cut-off frequency and might result in high THD in

the output voltage. Hence, the cut-off frequency should not be chosen within the band where the major harmonic components of the load current reside.

According to (Dewan and Ziogas 1979; Dewan 1981; Kim *et al*. 2000), the cost function of the filter can be defined as

$$COST = \frac{2Q_L + Q_c}{\sum_{h=1,odd}^{n} |V_{oh} I_h|}, \tag{1.4}$$

with

$$Q_L = \sum_{h=1,odd}^{n} |I_h|^2 X_{Lh},$$

$$Q_c = \sum_{h=1,odd}^{n} \frac{|V_{Ch}|^2}{X_{Ch}}.$$

The weight of the reactive power for the inductor is taken as twice that of the capacitor, considering the real price. Intuitively, the capacitance C size should be small for high-voltage applications and the inductance L should be small for high-current applications (while keeping the same cut-off frequency). Moreover, the inductance L should be small for applications with significant amount of current harmonics and the capacitance C should be small for applications with a significant amount of voltage harmonics, e.g. when the switching frequency is low.

When the ESRs R_L and R_C are considered or intentionally increased, the LC resonance around the cut-off frequency is dampened. However, the increase of R_C and/or R_L results in excessive power losses, which might cause difficulties in the LC design, in particular, for high-power applications (Strom *et al*. 2011). One possible option is to adopt control strategies to add virtual resistors to achieve the same purpose (Dahono 2003; Dahono *et al*. 2001; Guo and Liu 2011); see Chapter 7 for more details.

Of course, the current rating of the inductor and the voltage rating of the capacitor should be chosen to meet the requirement of the current and voltage levels of the inverter.

1.3.3.2 LCL Filters

Passive LCL filters, of which the circuit model is shown in Figure 1.33, are often adopted in grid-connected inverters. Adding the grid-side inductor L_g increases the order of the filter by 1 and, hence, an LCL filter is able to attenuate the harmonics better than an LC filter.

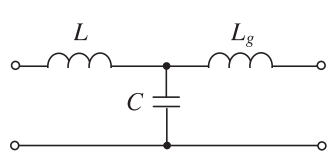

Figure 1.33 Circuit model of a passive LCL filter

More importantly, it adds a mechanism to limit the current harmonics caused by the harmonic components in the grid voltage.

For applications with a reasonably high switching frequency, the LCL filter can be designed in two steps, i.e. to design the LC filter first and then add the grid inductor. For applications with a very low switching frequency, e.g. at MW-level, extra care should be taken (Rockhill *et al*. 2011; Teodorescu *et al*. 2011). Some other guidelines about the design of LCL filters can be found in (Araujo *et al*. 2007; Bolsens *et al*. 2006; Liserre *et al*. 2005).

When designing the output filter, it is also important to check the reactive power of the filter capacitor. It should not considerably affect the rating of the inverter.

1.3.4 Voltage and Current Sensing

Due to the requirement on the galvanic isolation between the power part and the electronic part of an inverter, voltage and current sensors with galvanic isolation are often adopted to measure relevant voltages and currents needed by the controller. Moreover, these signals can be applied to achieve over-current and/or over-voltage protection.

It is possible to use conventional current and voltage transformers to measure currents and voltages but integrated voltage and current transducers based on the Hall effect are very popular due to the compact package, accuracy, high linearity, low temperature drift, wide frequency bandwidth, zero insertion loss, high immunity to external interference, etc. For example, LAH 25-NP from LEM is a compensated (closed-loop) multi-range current transducer (rated up to 25A) using the Hall effect (LEM n.d.a.). It can be mounted directly on a printed circuit board to measure AC, DC and pulsed currents. A sketch view of LAH 25-NP is shown in Figure 1.34(a), where R_M is the measuring resistor in the secondary circuit. The output from the sensor is a current that is in proportion to the current measured. The current flows through the measuring resistor and the resulting voltage can be processed further. The range of the measuring resistance depends on the type of the detected signal (DC or AC), the operating temperature and the supply voltage, but the range is quite wide and a suitable value can be easily chosen. The measurement range of the current can be changed via changing the connections of the input terminals, as shown in Table 1.3.

LV 25-P is a voltage transducer using the Hall effect (LEM n.d.b). Its sketch view is shown in Figure 1.34(b). In principle, this is a current transducer that works within a narrow current range around the rated primary current 10 mA (RMS). A resistor R_1 with an appropriate value

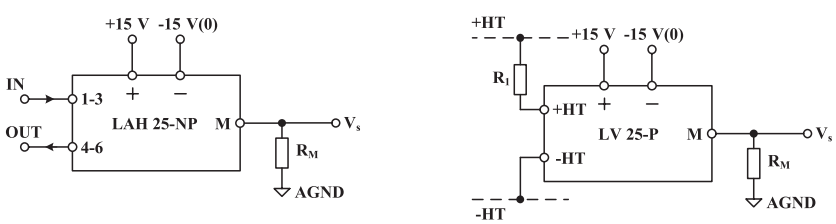

(a) Current sensor LAH 25-NP (b) Voltage sensor LV 25-P

Figure 1.34 Sketch view of voltage and current sensors

Table 1.3 Recommended PCB connections for LAH 25-NP (LEM n.d.a.)

Recommended PCB connections	Primary maximum current (A)	Primary nominal current (A)	Turns ratio	Nominal output current (mA)
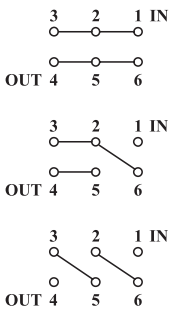	55	25	1:1000	25
	27	12	2:1000	24
	18	8	3:1000	24

is connected on the primary side so that the current caused by the measured voltage is around 10 mA. The output is also a current source, which can be converted into a voltage signal with the measuring resistor R_M. In order to obtain the best accuracy, the current flowing through R_1 should be designed to be around 10 mA according to the voltage measured. Note that the turns ratio is 2500:1000 and the primary coil resistance is 250 Ω.

Assume that the circuit with LV 25-P shown in Figure 1.34(b) is adopted to measure the DC bus voltage of an inverter, which is up to 800 V, and the maximum voltage for analog inputs is 3 V. If the measuring resistor is chosen as 100 Ω, then the maximum secondary current is $\frac{3V}{R_M} = 30$ mA, which corresponds to a primary current of $\frac{30\ \text{mA}}{2.5}$=12 mA. If two 33 kΩ resistors are connected in series as the primary resistor R_1, then the maximum DC bus voltage allowed is 12 mA × 2 × 33.25 kΩ=798 V. The maximum power dissipated by each primary resistor is $(12\ \text{mA})^2 \times 33\ \text{k}\Omega$=4.752 W so the power rating can be chosen as 5W. Note that the primary current is around the rated value 10 mA.

1.3.5 Signal Conditioning

In general, signals obtained from sensors are often not compatible with the requirements of the inputs to the controller and need further conditioning, which includes impedance matching, scaling, level-shifting, filtering, converting, linearisation, isolation, etc. For example, the output voltage provided by a voltage sensor may be bipolar but the voltage level required by the analog inputs of a DSP is often 0 ∼ 3 V.

1.3.5.1 Impedance Matching

Since the input impedance of an analog input of micro-controllers and DSP is often not very high, it is a good practice to use an op-amp driver circuit for signal conditioning of analog input signals and also as a buffer. This reduces the loading effect to the sensor circuits and

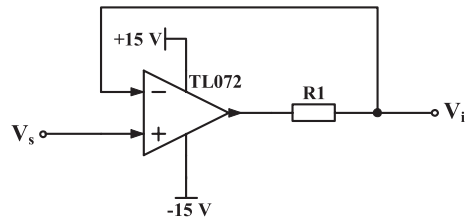

(a) Impedance matching with a voltage follower

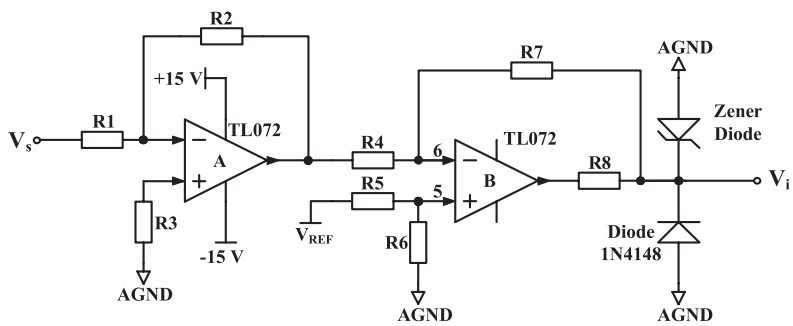

(b) Scaling and level-shifting

Figure 1.35 Typical signal conditioning circuits

offers a low output impedance to the analog inputs. The op-amp also isolates the ADC and protects the ADC inputs.

Figure 1.35(a) shows a typical voltage follower implemented with op-amp TL072. It is particularly suitable for cases where the output voltage from a sensor is already in the right range, e.g. $0 \sim 3$ V for DSP, but the impedance on both sides do not match.

1.3.5.2 Scaling and Level-shifting

If the voltage range of a signal from a sensor is not within the right range of the analog inputs, then the signal needs to be scaled and often shifted as well. In this case, the circuit shown in Figure 1.35(b) can be used. It consists of two stages: the first stage to scale (i.e. to amplify or attenuate) the signal V_s to the range of -3 V ~ 3 V and the second stage to scale and shift it to $0 \sim 3$ V. The relationship between the input V_s and the output V_i is

$$V_i = \frac{R7}{R4} \times \frac{R2}{R1} \times V_s + \frac{R4 + R7}{R4} \times \frac{R6}{R6 + R5} \times V_{\text{REF}}. \tag{1.5}$$

If $R4 = R5$ and $R6 = R7$, then

$$V_i = \frac{R7}{R4}(V_{\text{REF}} + \frac{R2}{R1} \times V_s).$$

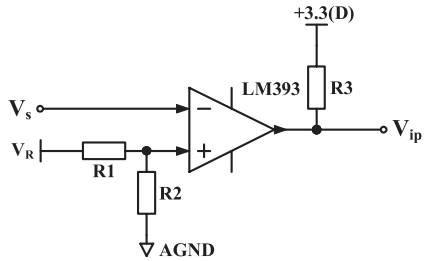

Figure 1.36 Typical protection circuit

After determining the voltage reference V_{REF}, $R1$ and $R2$ can be selected to scale V_s to the range $-V_{\mathrm{REF}} \sim V_{\mathrm{REF}}$. Then, $R4$ and $R7$ can be determined to scale $0 \sim 2 \times V_{\mathrm{REF}}$ to the range of the analog inputs. For example, if the range of analog inputs is $0 \sim 3$ V, then V_{REF} can be chosen as 3 V and $R4$ and $R7$ can be chosen to satisfy $R4 = 2 \times R7$.

1.3.6 Protection

It is very important to equip an inverter with as many protection mechanisms as possible, at a reasonable cost. For the currents and voltages already measured, it is straightforward to add over-voltage and over-current protection. This can be done in the control algorithm and/or with hardware circuits.

Figure 1.36 shows a typical circuit for protection when a signal exceeds a certain value. This can be used for over-voltage and over-current protection. It is basically a comparator and the threshold can be easily adjusted with a potentiometer $R1$. The output signal V_{ip} changes from 1 to 0 when

$$V_s > \frac{R2}{R1 + R2} V_{\mathrm{R}},$$

according to which appropriate actions can be taken.

1.3.7 Central Controller

Because of the complex functions of an inverter and the requirement of a high sampling frequency, e.g. to handle harmonics up to a certain order, it is often necessary to use a powerful micro-controller as the core of the electronic part of an inverter. Moreover, it is also important that many development tools and the maximum support possible are available to speed up the design process. There are many options but, in this section, the TMS320F28335 digital signal controller from Texas Instruments is described because (TI 2007)

1. it is a 32-bit single-precision floating-point processor compatible with IEEE-754 that is dedicated to demanding control applications, e.g. power and energy conversion applications;

2. it is supported with MATLAB® Embedded Coder (originally, Target Support Package) and, hence, codes for real-time execution can be generated automatically from Simulink® models, which saves a lot of time for development;
3. Texas Instruments run a worldwide university program[1] that provides excellent, and often free, support to educators, researchers and students in all phases of course curricula, senior design and research projects.

1.3.7.1 Overview of TI DSC TMS320F28335

Figure 1.37 shows the functional block diagram of TI DSC TMS320F28335 (TI 2007). It includes the same 32-bit fixed-point architecture as TI's existing C28x DSCs, but also include a single-precision (32-bit) IEEE 754 floating-point unit (FPU). It is a very efficient C/C++ engine, enabling users to develop their system control software in a high-level language. It also enables math algorithms to be developed using C/C++. The device is as efficient at DSP math tasks as it is at system control tasks that typically are handled by micro-controller devices. This efficiency removes the need for a second processor in many systems. The 32 × 32-bit MAC 64-bit processing capabilities enable the controller to handle high numerical resolution problems efficiently. Add to this the fast interrupt response with automatic context save of critical registers, resulting in a device that is capable of servicing many asynchronous events with minimal latency. The device has an 8-level-deep protected pipeline with pipelined memory accesses. This pipelining enables it to execute at high speeds without resorting to expensive high-speed memories. Special branch-look-ahead hardware minimises the latency for conditional discontinuities. Special store conditional operations further improve performance. TMS320F28335 comes with 256 K×16 Flash, 34 K×16 SARAM on-chip memory. There are two lower versions: F28334 with 128 K×16 Flash, 34 K×16 SARAM on-chip memory and F28332 with 64 K×16 Flash, 26 K×16 SARAM on-chip memory. The equivalent versions that do not include the FPU are F2823x.

The 2833x/2823x devices implement the standard IEEE 1149.1 JTAG interface. Additionally, the devices support real-time mode of operation whereby the contents of memory, peripheral and register locations can be modified while the processor is running and executing code and servicing interrupts. The user can also single step through non-time critical code while enabling time-critical interrupts to be serviced without interference. The device implements the real-time mode in hardware within the CPU. This is a feature unique to the 2833x device, requiring no software monitor. Additionally, special analysis hardware is provided that sets the hardware breakpoint or data/address watch-points and generates various user-selectable break events when a match occurs.

The 2833x/2823x devices provide options to boot normally or to download new software from an external connection or to select boot software that is programmed in the internal Flash/ROM. The Boot ROM also contains standard tables, such as SIN/COS waveforms, for use in math-related algorithms. The 2833x devices support high levels of security to protect the user firmware from being reverse engineered.

[1] http://e2e.ti.com/group/universityprogram/default.aspx?DCMP=univ&HQS=university

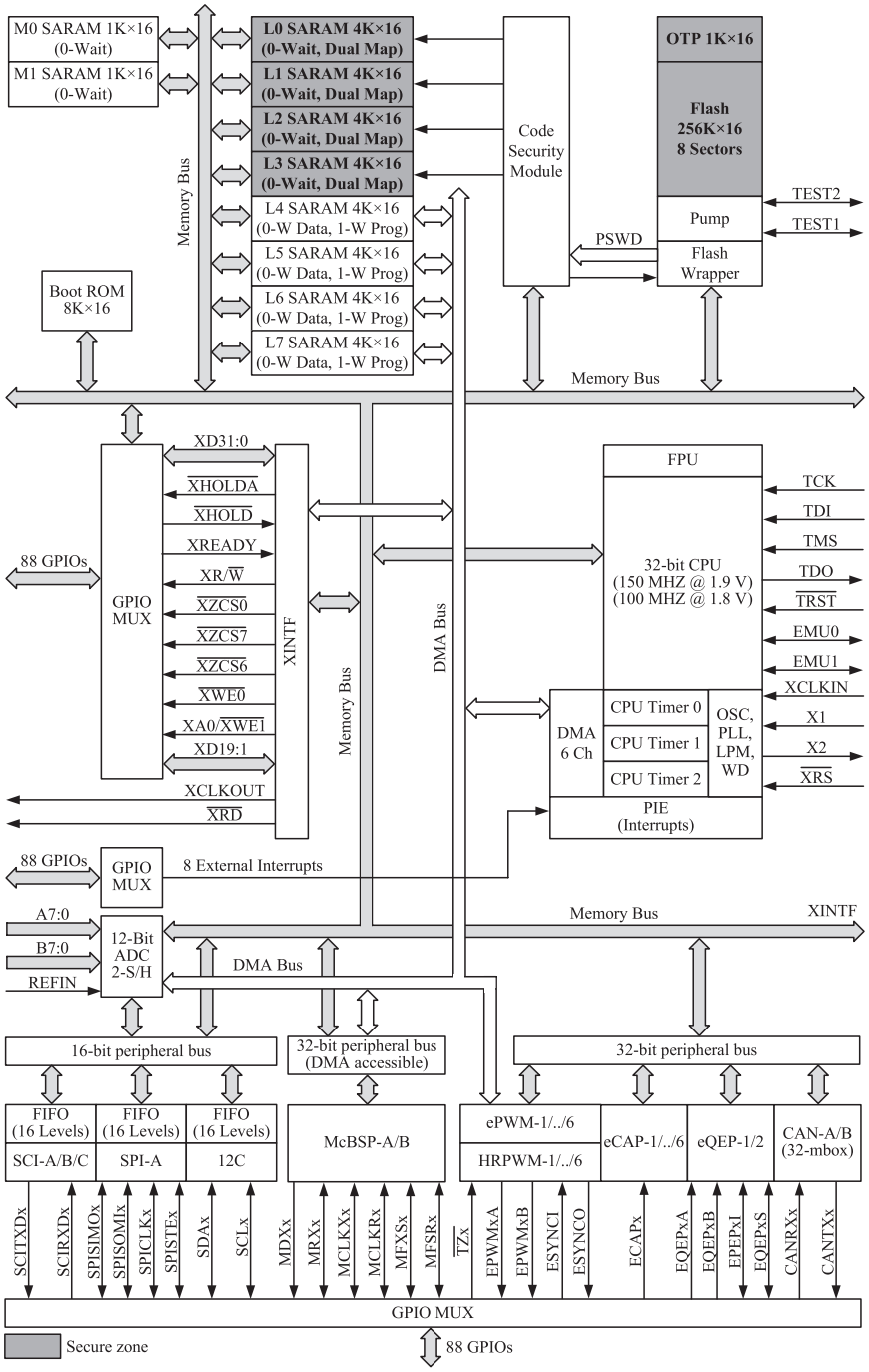

Figure 1.37 Functional block diagram of TI DSC TMS320F28335. *Source:* TI 2007

The 2833x/2823x devices support eight external interrupts and up to 96 peripheral interrupts through the Peripheral Interrupt Expansion (PIE) Block. The devices contain a watchdog timer and support three low-power modes: IDLE, STANDBY and HALT.

The 2833x/2823x devices support a range of peripherals for embedded control, including:

ePWM (up to 6-channel): The enhanced PWM peripheral supports independent/complementary PWM generation, adjustable dead-band generation for leading/trailing edges, latched/cycle-by-cycle trip mechanism. Three of the six PWM pins support HRPWM features. The ePWM registers are supported by the DMA to reduce the overhead for servicing this peripheral.

eCAP (up to six modules): The enhanced capture peripheral uses a 32-bit time base and registers up to four programmable events in continuous/one-shot capture modes. This peripheral can also be configured to generate an auxiliary PWM signal.

eQEP (up to 2 modules): The enhanced QEP peripheral uses a 32-bit position counter, supports low-speed measurement using capture unit and high-speed measurement using a 32-bit unit timer. This peripheral has a watchdog timer to detect motor stall and input error detection logic to identify simultaneous edge transition in QEP signals.

ADC (one module with 16 channels): The ADC block is a 12-bit converter with 16 single-ended (0-3V) channels multiplexed through two built-in S/H. Conversion rate can be up to 80 ns at 25-MHz ADC clock, 12.5 MSPS. It contains two sample-and-hold units for simultaneous sampling. The ADC registers are supported by the DMA to reduce the overhead for servicing this peripheral.

The 2833x/2823x devices also support a range of peripherals for communication, including:

eCAN: The enhanced CAN peripheral supports 32 mailboxes, time stamping of messages, and is CAN 2.0B-compliant.

McBSP: The multichannel buffered serial port (McBSP) connects to E1/T1 lines, phone-quality codecs for modem applications or high-quality stereo audio DAC devices. The McBSP receive and transmit registers are supported by the DMA to significantly reduce the overhead for servicing this peripheral. Each McBSP module can be configured as an SPI as required.

SPI: The SPI is a high-speed, synchronous serial I/O port that allows a serial bit stream of programmed length (one to sixteen bits) to be shifted into and out of the device at a programmable bit-transfer rate. Normally, the SPI is used for communications between the DSC and external peripherals or another processor. Typical applications include external I/O or peripheral expansion through devices such as shift registers, display drivers, and ADCs. Multi-device communications are supported by the master/slave operation of the SPI. On the 2833x/2823x, the SPI contains a 16-level receive and transmit FIFO for reducing interrupt servicing overhead.

SCI: The serial communications interface is a two-wire asynchronous serial port, commonly known as UART. The SCI contains a 16-level receive and transmit FIFO for reducing interrupt servicing overhead.

I2C: The inter-integrated circuit (I2C) module provides an interface between a DSC and other devices compliant with Philips Semiconductors Inter-IC bus (I2C-bus) specification version 2.1 and connected by way of an I2C-bus. External components attached to this 2-wire serial bus can transmit/receive up to 8-bit data to/from the DSC through the I2C module. On the 2833x/2823x, the I2C contains a 16-level receive and transmit FIFO for reducing interrupt servicing overhead.

More details about TMS320F28335 can be found in (TI 2007).

1.3.7.2 TMS320F28335 ControlCARD

Texas Instruments offer a controlCARD[2] that is equipped with a TMS320F28335 to be used for initial software development and short run builds for system prototypes, test stands, and many other projects that require easy access to high-performance controllers (TI 2002). The controlCARDs are complete board-level modules that utilise an industry-standard DIMM form factor to provide a low-profile single-board controller solution. All of the C2000 controlCARDs use the same 100-pin connector footprint to provide the analog and digital I/Os on-board controller and are completely interchangeable. Each controlCARD provides an isolated RS-232 interface for communications. The host system needs to provide only 5 V power to the controlCARD.

1.3.7.3 TMS320F28335 Experimenter Kit

Texas Instruments also offer an experimenter kit[3] that is equipped with a TMS320F28335 DSC. It is an ideal product to be used for initial device exploration and testing. The kit has a docking station with access to all controlCARD signals, breadboard areas, RS-232, JTAG connector, and on board USB JTAG emulation. Each kit contains a 28335 controlCARD and is complete with Code Composer Studio™ IDE v3.3 C28x™ Free 32 K Byte Version. C2000 applications software with example codes and full hardware details are also available. Note that no separate JTAG emulator is required, as the docking station features on-board USB JTAG emulation.

1.3.8 Test Equipment

In order to test the working condition and performance of inverters, many instruments are needed. In addition to conventional multi-meters and oscilloscopes, etc, power analysers/meters are often needed.

[2]http://www.ti.com/tool/tmdscncd28335
[3]http://www.ti.com/tool/tmdsdock28335

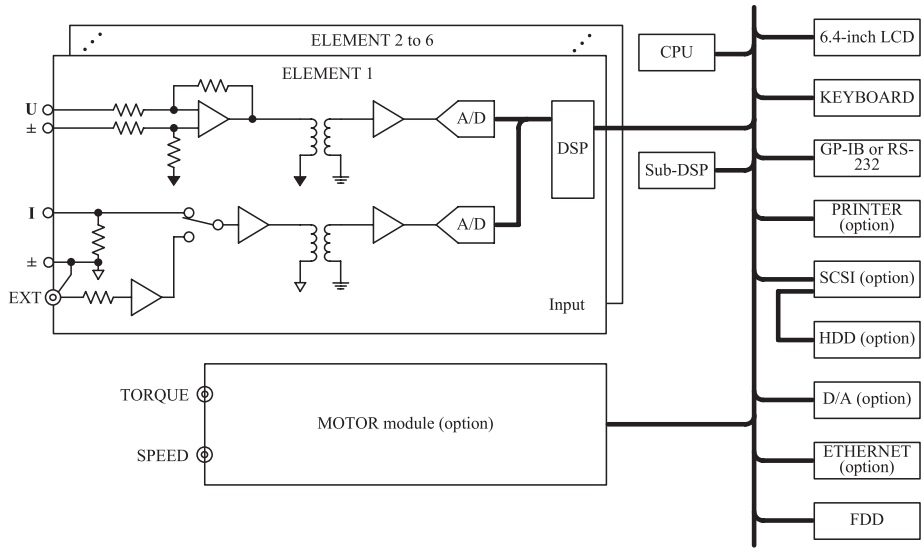

Figure 1.38 Functional block diagram of WT1600. *Source:* Iwase *et al*. 2003

Yokogawa WT1600 is a high-precision, wide-bandwidth digital power meter (Iwase *et al*. 2003) that is able to measure DC and 0.5 Hz to 1 MHz AC signals with a basic power accuracy of 0.1%. With the maximum of six input elements installed, a single WT1600 is able to measure the efficiency of a three-phase inverter, in addition to the measurement of voltages, currents, power, waveform quality, and waveform display. There are two different input elements: 5 A and 50 A. Both elements are standard-equipped with direct voltage and current inputs, as well as a compatible current sensor input covering from a shunt resistor to various current probes. Both elements can be installed together so both extremely small currents and large currents can be measured. The measuring ranges are 1.5 V to 1000 V for voltage (DC and 0.5 Hz to 1 MHz AC), and 10 mA to 5 A on the 5 A input elements (DC and 0.5 Hz to 1 MHz AC signals) and 1 A to 50 A on the 50 A input elements (0.5 Hz to 1 MHz AC signals) for current.

Figure 1.38 shows the basic configuration of the WT1600. It consists of four main components: input elements, CPU, Sub-DSP and display. All the input signals are first processed by the input block. After being electrically insulated and digitally converted, signals are passed to a DSP to determine measured values. The CPU block receives the measured values from the DSP and prepares them for display, communication, D/A output and other purposes. The Sub-DSP block performs calculations that require phase information between the elements, including harmonic measurement, and delta-Y conversion for three-phase, three-wire systems (Iwase *et al*. 2003). It is also possible to synchronise the measurement with two WT1600 units for 12 voltages and 12 currents.

An upgraded model WT1800 is now available,[4] with 5 MHz bandwidth for voltage and current, capable of measuring low frequency AC signals down to 0.1 Hz, simultaneous

[4]http://tmi.yokogawa.com/products/digital-power-analyzers/

measurement of the harmonic distortion of input and output signals up to the 500th-order harmonic even at high fundamental frequencies, e.g. 400 Hz, and updated computer interfaces, e.g. two USB ports.

1.4 Wind Power Systems

During the last decade, more and more attention has been paid to utilising renewable energy sources to tackle the energy and environmental issues being faced today worldwide. Wind energy has been regarded as an environmentally friendly alternative energy source and has attracted most of the attention. Many initiatives have been launched to increase the share of wind power in electricity generation (Mathew 2006; Wagner and Mathur 2009).

In this section, wind power systems are briefly discussed. More details about wind power systems can be found in many books, e.g. (Ackerman 2005; Bianchi *et al*. 2007; Blaabjerg and Chen 2006; Burton 2001; Heier 2006; Manwell *et al*. 2009; Mathew 2006; Mathew and Philip 2011; Ragheb 2009; Spera 2009; Thongam and Ouhrouche 2011; Wagner and Mathur 2009).

1.4.1 Basics of Wind Power Generation

Assume that the wind speed is v_w m/s and the area swept by a wind turbine is A m^2. Then the volume of the air swept through in unit time is Av_w. If the air density is ρ kg/m^3, then the mass m of the air passing through the area in unit time is $\rho A v_w$ kg. The kinetic energy of this mass of the air moving at velocity v_w in unit time is

$$\frac{1}{2}mv_w^2 = \frac{1}{2}\rho A v_w^3.$$

This is actually the same as the power carried by the wind motion. For a wind turbine with rotor blades of R m long, the area swept is $A = \pi R^2$ and hence the wind power available is

$$P_w = \frac{1}{2}\rho\pi R^2 v_w^3.$$

In reality, it is impossible to convert all the energy into electricity. The actual power produced by a wind turbine can be calculated as

$$P_m = \frac{1}{2}\rho\pi R^2 v_w^3 C_p(\lambda, \beta), \tag{1.6}$$

where $C_p(\lambda, \beta)$ is the power coefficient that is dependent on the turbine design, the pitch angle β and the tip-speed ratio λ defined as

$$\lambda = \omega_r R / v_w, \tag{1.7}$$

where ω_r is the angular speed of the wind turbine. The tip-speed ratio plays a vital role in extracting power from wind. If the rotor turns too slowly, most of the wind passes through

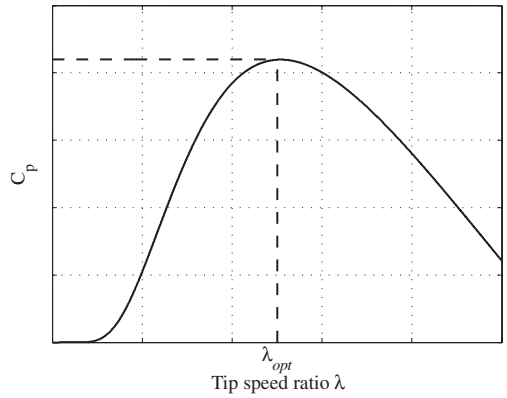

Figure 1.39 Power coefficient C_p as a function of the tip-speed ratio λ

the gap between the rotor blades without doing any work; if the rotor turns too quickly, the blurring blades block the wind like a solid wall. Hence, wind turbines are designed to operate at optimal tip-speed ratios so that as much power as possible can be extracted.

The power coefficient C_p is a highly non-linear function of λ and β. For wind turbines with a fixed pitch angle β, the relationship between C_p and the tip speed ratio λ often has the shape shown in Figure 1.39. The power coefficient reaches its maximum point at the optimum tip-speed ratio λ_{opt}, which depends on the number of blades in the wind turbine rotor. The fewer the number of blades, the faster the wind turbine rotor needs to turn to extract the maximum power from the wind. A two-bladed rotor has an optimum tip-speed ratio of around 6, a three-bladed rotor around 5, and a four-bladed rotor around 3 (Burton 2001). According to (1.7), the curves of C_p against different wind speeds have similar shapes, as shown in Figure 1.40(a), where six C_p curves are shown for six different wind speeds with $v_{w1} > v_{w2} > v_{w3} > v_{w4} > v_{w5} > v_{w6}$. The corresponding power P_m is shown in Figure 1.40(b). Therefore, the operational points of a wind turbine at different wind speeds are different, which are determined by the optimal tip-speed ratio λ_{opt} and the wind speed. See (Heier 2006) for more details. It is worth noting that the power coefficient C_p of a wind turbine is limited by $\frac{16}{27} \approx 0.593$, according to the Betz law.[5]

1.4.2 Wind Turbines

A wind turbine is a device that captures the kinetic energy of wind. Historically, a wind turbine was frequently used as a mechanical device with a number of blades to drive machinery. Nowadays, it is often used to drive a generator so that the kinetic energy is converted to electricity. The main types of wind turbines are shown in Figure 1.41 (Heier 2006). Most modern wind turbines use a horizontal axis configuration with two or three blades, operating either downwind or upwind (Manwell *et al*. 2009). The typical structure of a horizontal axis

[5] http://en.wikipedia.org/wiki/Betz%27_law

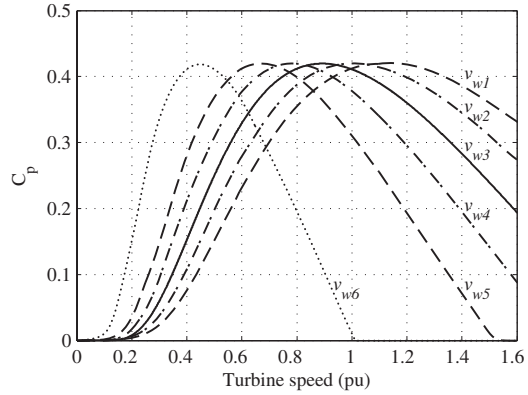

(a) C_p as a function of the turbine speed normalised to the rated speed

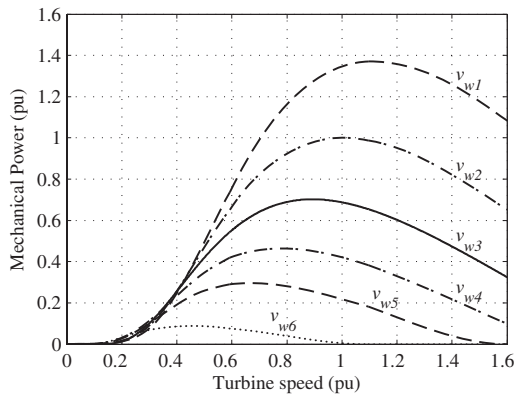

(b) Power P_m

Figure 1.40 Power coefficient C_p and mechanical power P_m at different wind speeds

wind turbine is shown in Figure 1.42, with major components including blades, a rotor hub, drivetrain (bearing and gears, etc.), a generator and the associated control system.

Wind turbines can be used for stand-alone applications, connected to a utility power grid or even combined with photovoltaic systems, batteries and diesel generators, etc. to form hybrid systems. Small-scale wind turbines are often used in stand-alone applications, e.g. for water pumping, communication stations, and supply of electricity to farms and light towers, etc. that are far from the utility grid. For utility-scale applications of wind power, a large number of turbines are usually built together to form wind farms to fully utilise the available wind power and to reduce the investment cost on infrastructure.

A wind turbine can be designed for fixed-speed or variable-speed operation. Variable-speed wind turbines can produce more energy than fixed-speed ones but power electronic converters are needed to provide a voltage at a fixed frequency and a fixed amplitude.

Most turbine manufacturers have opted for a direct drive configuration to remove the gears between the low speed turbine rotor and the high speed three-phase generator. This

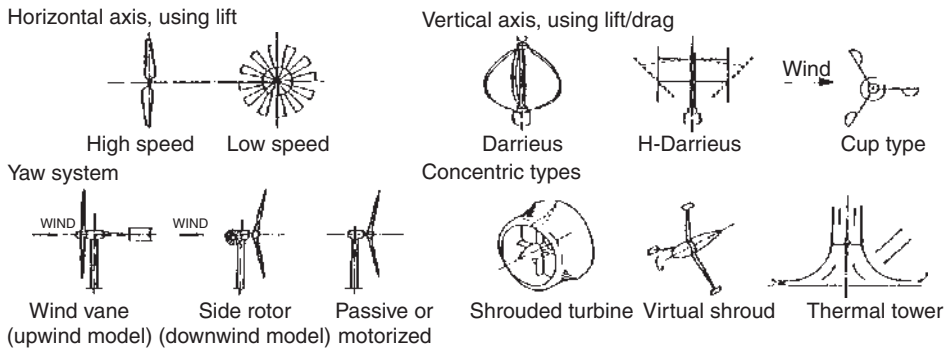

Figure 1.41 Main turbine types. *Source:* Heier 2006, Grid Integration of Wind Energy Conversion Systems: Second Edition

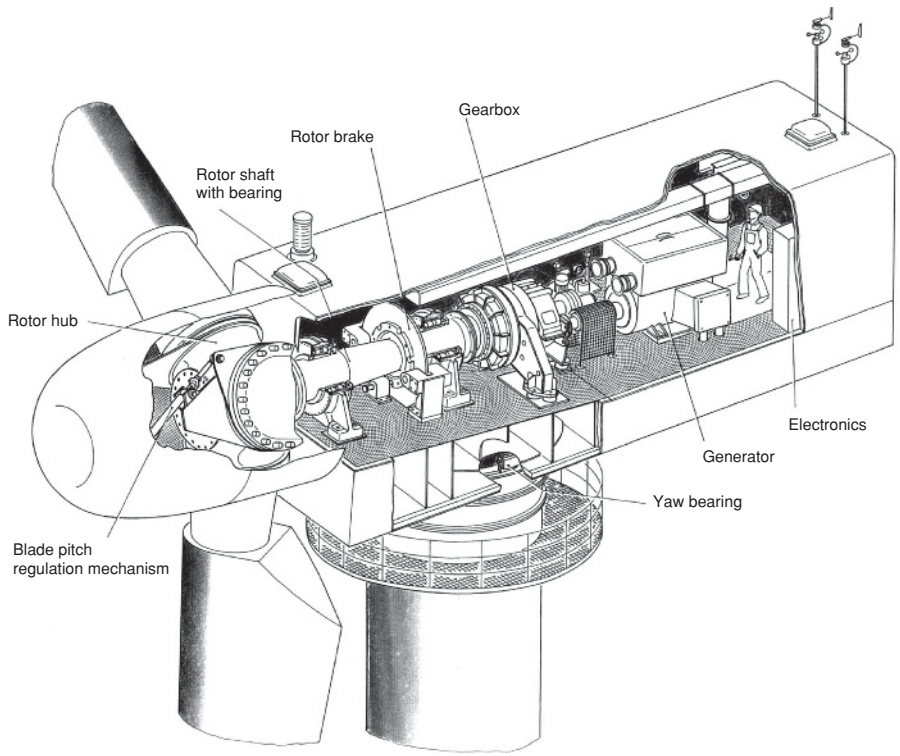

Figure 1.42 Structure of a typical wind turbine. *Source:* Heier 2006, Grid Integration of Wind Energy Conversion Systems: Second Edition

configuration offers high reliability, low maintenance, and possibly low cost for certain turbines (Mathew and Philip 2011).

1.4.3 Generators and Topologies

A generator is an electric machine that converts mechanical energy to electrical energy. It forces electric charge to flow through an external electrical circuit. For wind power applications, fixed-speed wind turbines were mostly operated with a squirrel-cage induction generator (SCIG) and a multiple-stage gearbox during the 1980s and 1990s. Since the late 1990s, most wind turbines, in which the power level was increased to 1.5 MW and above, have adopted variable-speed operation because of the grid requirement for power quality. For these variable-speed applications, doubly-fed induction generators (DFIG) are commonly used together with a multi-stage gearbox and power electronic converters. Permanent magnet synchronous generators (PMSG) are becoming increasingly popular because of their ability to reduce failures in the gearbox and lower maintenance problems (Spera 2009). The common topologies adopting these generators for wind power applications (Baroudi *et al*. 2005; Blaabjerg *et al*. 2006) are shown in Figure 1.43.

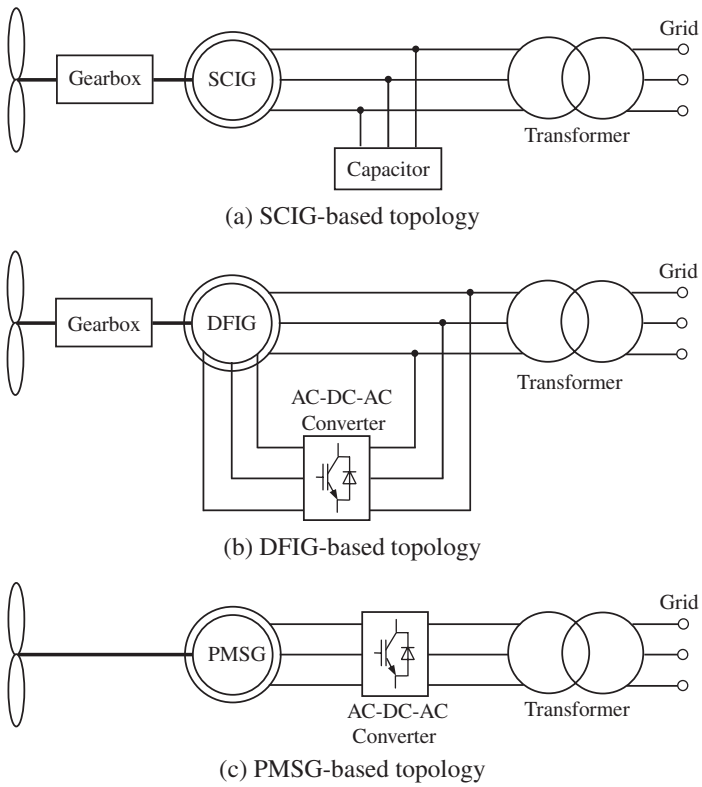

Figure 1.43 Typical topologies for wind power systems

1.4.3.1 Squirrel-Cage Induction Generators (SCIG)

A squirrel-cage induction machine is often operated as a motor but it can be operated as a generator when driven by a prime mover to a speed exceeding the synchronous speed. Induction machines are widely applied as generators in wind power applications due to the reduced unit cost and size, ruggedness, lack of brushes, absence of a separate DC source, ease of maintenance, self-protection against severe overloads and short circuits, etc. (Bansal 2005).

An induction generator produces real power but it needs reactive power to establish the excitation (the magnetic field). This leads to a low power factor, which is often penalised by utility companies. The reactive power needed for excitation can be provided by a capacitor bank, the grid or a solid-state power electronic converter. The connection of an SCIG, in particular a big one, to the grid often causes a large inrush current that is $7 \sim 8$ times of the rated current and a soft-starter is often needed. The pole pair number of SCIG used in commercial fixed-speed wind turbines is often equal to 2 or 3, which corresponds to a synchronous speed of 1500 rpm or 1000 rpm for a 50 Hz system. As a result, a three-stage gearbox is often required in the drive train.

SCIGs are often applied in fixed-speed wind turbine systems directly connected to the grid through a transformer, as shown in Figure 1.43(a). With this topology, the rotor blades are directly fixed to the hub and adjusted only once when the turbine is erected. The power limitation over the rated wind speed is achieved by stalling the rotor blades. Wind turbines with this topology are completely passive and, hence, this topology is called passive stall control or shortly stall control. In most cases, capacitors are connected in parallel to provide the reactive power needed for excitation.

There are obvious advantages of using SCIGs. However, there are also disadvantages. The speed of operation is not controllable and it can be varied only within a very narrow range because the rotor circuit is not accessible, which makes it difficult to extract the maximum available wind power. The need for a three-stage gearbox in the drive train considerably increases the weight of the nacelle, and the investment and maintenance costs. Moreover, it is necessary to obtain the excitation current from the grid, which makes impossible to support the grid voltage.

1.4.3.2 Doubly-fed Induction Generators (DFIG)

The fact that the rotor circuit of an SCIG is not accessible can be changed if the rotor circuit is wound and made accessible via slip rings, which offers the possibility of controlling the rotor circuit so that the operational speed range of the generator can be increased in a controlled manner. The rotor circuit is often connected to back-to-back power electronic converters, which consists of a rotor-side converter and a grid-side converter sharing the same DC bus, so that the difference between the mechanical speed of the rotor and the electrical speed of the grid can be compensated via injecting a current with a variable frequency into the rotor circuit. Hence, the operation during both normal and faulty conditions can be regulated by controlling the converters.

A DFIG can be excited via the rotor windings and does not have to be excited via the stator windings. If needed, the reactive power needed for the excitation from the stator windings can be generated by the grid-side converter. As a result, a wind power plant equipped with DFIGs can easily take part in the regulation of grid voltage. The stator always feeds real power to the

grid but the real power in the rotor circuit can flow bidirectionally, from the grid to the rotor or from the rotor to the grid, depending on the operational condition. Ignoring the losses, the power handled by the rotor circuit is (Tazil *et al*. 2010)

$$P_{\text{rotor}} = -s \cdot P_{\text{stator}},$$

where s is the slip, and the power sent to the grid is

$$P_{\text{grid}} = P_{\text{rotor}} + P_{\text{stator}} = (1 - s)P_{\text{stator}}.$$

Since most of the power flows through the stator circuit, the power processed by the rotor circuit can be reduced to roughly 30%. This means the great advantage of a sufficient range of operational speed can be achieved at a reasonably low cost.

DFIGs are often applied in variable speed wind turbine systems with a multi-stage gearbox, as shown in Figure 1.43(b). Its basic operating principle is the same as an SCIG-based system but the rotor active power is controlled by the power electronic converters so that a speed range of ±30% around the synchronous speed can be obtained. The choice of the rated power for the rotor converter is a trade-off between cost and the desired speed range. Moreover, the converter compensates the reactive power and smooths the grid connection.

Although a DFIG offers a sufficient range of operational speed and many other merits, it is very sensitive to voltage disturbances, especially voltage sags. Abrupt voltage drops at the terminals often cause large voltage disturbances on the rotor, which may exceed the voltage rating of the rotor-side converter (RSC), make the rotor current uncontrollable, and even damage the RSC. Many strategies are available to improve the low-voltage ride-through capability of DFIGs; see (Guo *et al*. 2012).

1.4.3.3 Permanent Magnet Synchronous Generator (PMSG)

A PMSG adopts a permanent magnet to generate the magnetic field needed for electricity generation. Hence, there is no need to provide an external power supply for excitation and there is no need to have a rotor circuit. This simplifies the structure and reduces the maintenance cost. PMSGs are more efficient than induction generators and the power factor can be made unity or even leading. Moreover, PMSGs have very high power density and are becoming cost-effective because the price of rare-earth magnets has reduced by more than an order of magnitude in the last 10 years. As a result, PMSGs are becoming increasingly popular for wind power applications. A PMSG runs at the synchronous speed and the frequency of electricity generated is directly in proportion to the mechanical speed and hence the slip is zero. This could be used to eliminate the need for a mechanical sensor to measure the speed of the turbine.

PMSGs are often applied in variable speed wind turbine systems, which are direct-driven or with a single stage gearbox, as shown in Figure 1.43(c). Full-scale back-to-back converters are often used for the AC-DC-AC conversion. It is also possible to use an uncontrolled rectifier cascaded with a DC-DC converter and an inverter.

Because permanent magnets are used, care should always be taken to avoid possible demagnetisation caused by too high currents and/or too high temperature.

1.4.4 Control of Wind Power Systems

1.4.4.1 Rotor Power Control at High Wind Speeds

At high wind speeds, the power transferred to the rotor should be controlled to protect the rotor, the generator and the power electronic converters, if any, from overloading and to protect the rotor from damage when the generator loses its electrical load. Hence, rotor power control plays a very important role in wind turbine systems.

The following strategies are often adopted (Bianchi *et al*. 2007; Ragheb 2009) for rotor power control:

1. Yaw control: Wind turbines are oriented perpendicular to the wind stream during normal operation using wind orientation mechanism or yaw control. During high wind speeds, the rotor axis can be turned out of the wind direction to protect the wind turbine. This is often used in small-scale wind turbines.
2. Pitch control: Instead of turning the whole rotor out of the wind direction during high wind speeds, rotor blades can be individually rotated around their longitudinal axis to furl, that is, to reduce the angle of attack. A fully furled turbine blade, when stopped, has the edge of the blade facing into the wind. With the pitch control mechanism in place, it can also be used during normal operation to maximise the power extracted.
3. Stall control: The blades, which are attached to the hub at a fixed angle, are aerodynamically designed to take advantage of the stall effect that occurs at high wind speeds. When this happens, turbulence occurs at the back side of the blade. As a result, the lift drops and the drag increases, which leads to reduced driving torque and power production. Stall-controlled wind turbines do not have moving parts introduced into the rotor but often have additional aerodynamic brakes.
4. Active stall control: The blades are pitched to increase the angle of attack during high wind speeds so that the stall effect is created. This is opposite to the pitch control, where the angle of attack is reduced during high wind speeds.

1.4.4.2 Rotor Speed Control during Normal Operation

It was shown at the beginning of this section that the operational condition of a wind turbine should be changed according to the wind speed in order to extract the maximum power available, which requires the rotor blades to run at such a speed that the tip-speed ratio is kept at the optimum value. This is often called maximum power point tracking (MPPT).

The maximum achievable power of a wind turbine system can be written as

$$P_{max} = K_{opt}\omega_{ropt}^3,$$

where

$$K_{opt} = \frac{0.5\pi\rho C_{pmax} R^5}{\lambda_{opt}^3}$$

is a constant related to the optimal tip-speed ratio λ_{opt} and the maximum power coefficient C_{pmax}, and

$$\omega_{ropt} = \frac{\lambda_{opt} v_w}{R}$$

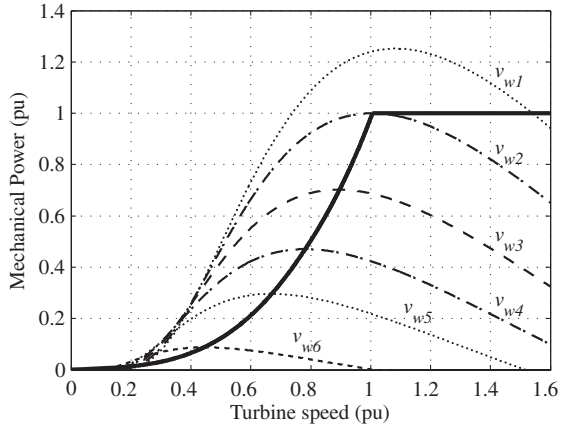

Figure 1.44 Desired operational power curve

is the optimal turbine speed corresponding to the wind speed v_w. In order to extract the maximum power from the wind, the turbine should always be operated with λ_{opt} via controlling the turbine speed.

A typical desired operational power curve corresponding to different wind speeds is shown by the thick line in Figure 1.44: it increases in proportion to ω_{ropt}^3 when the rotor speed is below the rated speed and is maintained at the rated power to protect the wind turbine system when the rotor speed exceeds the rated speed. If the wind speed reaches the cut-off speed, then the turbine should be shut down. This is not shown in Figure 1.44. An MPPT technique should be applied to extract the maximum power from the wind turbine when the rotor speed is below the rated speed and a rotor power control mechanism should be activated when the rotor speed exceeds the rated power.

MPPT controllers can be classified into three types (Thongam and Ouhrouche 2011): tip-speed ratio (TSR) control, power signal feedback (PSF) control and hill-climb search (HCS) control. For TSR control, both the wind speed and the turbine speed are measured or estimated to maintain the TSR at λ_{opt} so that the maximum possible power is extracted. For PSF control, the power is measured and controlled to reach the maximum power, according to the power curve of the wind turbine obtained through either simulation or off-line experiments. The HCS method is different from the TSR and PSF control methods, in which the maximum power point is continuously looked for, according to the current operating power point and the relationship between the changes in power and speed.

1.4.4.3 Grid Integration

Once the power is extracted, then it is important to feed it to the grid. Apart from the SCIG-based topology, power electronic converters are involved in the grid integration of wind power. How to control power electronic converters so that the integration of wind power into the grid can be done in a grid-friendly manner and imposes minimum impact on the grid is the main subject of this book and will be discussed in detail.

1.5 Solar Power Systems

1.5.1 Introduction to Solar Power

Solar energy, radiant light and heat from the sun, has been utilised since ancient times using a range of ever-evolving technologies. The total solar energy absorbed by the Earth's atmosphere, oceans and land masses is approximately 3,850,000 exajoules (EJ) per year. In 2002, this was more energy in one hour than the world used in one year.[6]

When matter (metals and non-metallic solids, liquids or gases) absorbs energy from electromagnetic radiation of very short wavelength, such as visible or ultraviolet radiation, electrons are emitted (such electrons are often referred to as photoelectrons). This effect is called the photoelectric effect. Based on this, solar cells or photovoltaic (PV) cells, which consist of one or two layers of semi-conducting material, can be made to directly convert the radiation from the sun into electricity. When light shines on the cell it creates an electric field across the layers, which causes electricity to flow. The greater the intensity of the light, the greater the flow of electricity is (Carrasco *et al*. 2006b; EPIA 2010).

Due to the growing demand for renewable energy sources, the manufacturing of solar cells and photovoltaic arrays has advanced considerably in recent years. Over the past decade, the photovoltaic market has experienced unprecedented growth. In 2010, the capacity grew from 7.2 GW installed in 2009 to 16.6 GW. The total installed global capacity in 2011 amounts to around 40 GW, producing some 50 TWh of electrical power every year (EPIA 2011).

The performance of a solar cell is measured in terms of its efficiency at turning sunlight into electricity. A typical commercial solar cell has an efficiency of about 15%. The amount of power produced by a solar power installation depends on the location of the sun in the sky and on the amount of cloud cover. The variations and predictability in cloud cover are similar to that of wind speed. The location of the sun in the sky shows a predictable daily and seasonal variation caused by the rotation of the earth on its axis and around the sun. This makes solar power more predictable than wind power but there is limited experience with prediction for solar power to verify this (Bollen and Hassan 2011; EPIA 2010).

The energy from the sun can be focused (concentrated) using large arrays of mirrors in concentrated solar power (CSP) plants to boil water that in turn powers a turbine as in a conventional thermal power station. One advantage of the CSP plants is that the energy can be more easily stored in large amounts of thermal energy with minimal losses and, thus, they can provide energy on demand during day and night. As a result, CSP plants can contribute to stabilising electricity grids by compensating fluctuations of renewable energy sources if they are part of the same network (Jacobson 2009; Moreno 2011).

PV systems can provide clean power for small or large applications. They are already installed and generating energy around the world in individual homes, housing developments, offices and public buildings. Although PV systems can operate as stand-alone systems, where it is difficult to connect to the grid or where there is no energy infrastructure, they are mostly connected to the grid for homes and businesses in developed areas. In this case, any excessive power produced can be fed into the electricity grid. Electricity can be imported from the network when there is no sunlight. Such small installations are also easy to set up and connect to the grid. The rules about grid connection vary from country to country, but almost in all countries it is compulsory to contact the local network operator before connection. Small

[6]http://en.wikipedia.org/wiki/Solar_energy

rooftop installations are close to the consumption of electricity and they, therefore, reduce the power transport through both the transmission and the distribution networks.

1.5.2 Processing of Solar Power

Similar to wind power, the source of solar power is not controllable and hence there is a need to maximise the power generated from the sunlight. This can be done with MPPT strategies implemented at an appropriate stage of power processing.

PV systems can be categorised according to the number of power processing stages, the location of power decoupling capacitors, with or without transformers, and types of grid interfaces etc (Carrasco *et al*. 2006b; Kjaer *et al*. 2005; Li and Wolfs 2008). Some typical topologies for PV systems are shown in Figure 1.45. Power electronic inverters are essential for converting the DC power produced by PV cells into AC power that is compatible with the electricity distribution network and the majority of common electrical appliances. For a grid-connected PV system, the inverter often plays two major roles: (1) to ensure that the PV system captures the maximum power from the sunlight with a maximum-power-point-tracking (MPPT) algorithm; and (2) to feed the energy into the grid, nowadays often as a clean current,

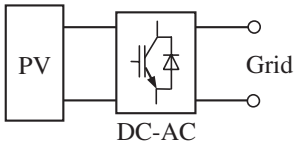

(a) Single-stage processing

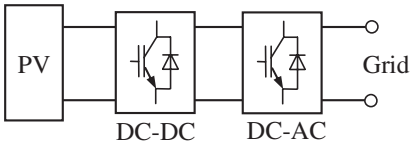

(b) Two-stage processing

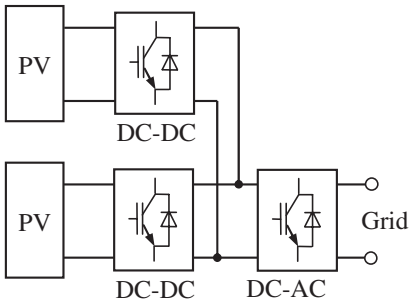

(c) Two-stage processing with a shared DC bus

Figure 1.45 Some typical topologies for PV systems

according to utility regulations, e.g. on power quality control, reactive power control, fault ride-through etc. (Kjaer *et al*. 2005). If a DC/DC converter is introduced, then the MPPT function is often embedded into the controller of the DC/DC converter.

1.6 Smart Grid Integration

1.6.1 Operation Paradigms of Power Systems

1.6.1.1 Centralised Generation

Electrical power systems have been in existence all over the world for more than 100 years. A typical power system, as shown in Figure 1.46, consists of facilities to generate, transmit and distribute electrical power to consumers or loads (Karady and Holbert 2004) because power plants, which generate electricity from energy sources such as fossil fuels, hydro, nuclear, etc, are far from consumers. Although there are often interconnections at the transmission level to form a strong grid, to which massive power plants are connected, electricity normally flows uni-directionally from generation to loads. In particular, the electricity flows through the distribution network is unidirectional.

1.6.1.2 Distributed Generation

For economic, technical and environmental reasons, there is today a trend towards the use of small power generating units connected to the low-voltage distribution systems in addition to the traditional large generators connected to the high-voltage transmission systems (Jenkins

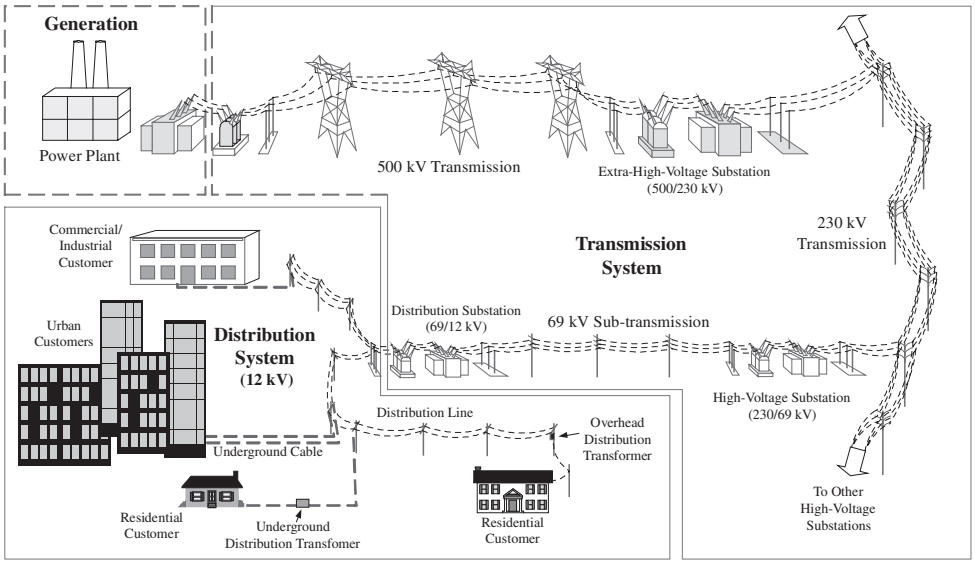

Figure 1.46 Overview of a current electrical power system. *Source:* Karady G and Holbert K, 2004. *Electrical Energy Conversion and Transport: An Interactive Computer-Based Approach*, © John Wiley & Sons

et al. 2000), following the large-scale utilisation of renewable energy sources, energy storage systems, electrical vehicles, etc. Not only is there a change of scale but also a change of technology. Large generators are almost exclusively 50/60 Hz synchronous machines. Distributed power generators include variable speed (variable frequency) sources, high speed (high frequency) sources and direct energy conversion sources that produce DC. For example, wind turbines are most effective if free to generate at variable frequency and so they require conversion from AC (variable frequency) to DC to AC (50/60 Hz) (Chen and Spooner 2001); small gas turbines with direct drive generators operate at high frequencies and also require AC to DC to AC conversion (Etezadi-Amoli and Choma 2001), and photovoltaic arrays require DC-AC conversion (Enslin *et al*. 1997).

There are several operating regimes possible for distributed generation. One such is for distributed generators to form microgrids before being connected to the public grid. As a result, local consumers are largely supplied by the local distributed generation with shortfalls or surpluses exchanged through a connection to the public electricity supply system (Lasseter 2002; Venkataramanan and Illindala 2002). The use of a microgrid opens up the possibility of making the distributed generator responsible for local power quality in a way that is not possible with conventional generators (Green and Prodanović 2003). Another option is to connect distributed generation and storage systems directly to the grid.

1.6.2 Introduction to Smart Grids

The change of the operation paradigms of power systems does not stop at distributed generation. A more advanced concept, the smart grid, has been introduced to power systems to further improve reliability, quality, operating efficiency, resilience to threats while reducing the impact of power systems to environment, taking advantage of advanced digital technology. The main characteristics of smart grids with comparison to today's grids are shown in Table 1.4, according to (DOE 2009a). The scope of a smart grid is depicted in Figure 1.47, which shows that smart grids have a layered structure consisting of:

- Infrastructure: the traditional generation, transmission and distribution facilities and new add-ons, such as renewable energy generators, PHEVs, smart appliances, distributed generation and storage systems, etc.
- Control, communication and information systems to facilitate system coordination, operation, and improvement of energy efficiency, marketing, and security etc.

The areas of the electric system that cover the scope of a smart grid include the following (DOE 2009b):

- *Area, regional and national coordination regimes:* A series of interrelated, hierarchical coordination functions exists for the economic and reliable operation of the electric system. These include balancing areas, independent system operators (ISOs), regional transmission operators (RTOs), electricity market operations, and government emergency-operation centres. Smart-grid elements in this area include collecting measurements from across the system to determine system state and health, and coordinating actions to enhance economic efficiency, reliability, environmental compliance, or response to disturbances.

Table 1.4 Comparison of today's grid with smart grid

Characteristic	Today's Grid	Smart Grid
Enables active participation by consumers	Consumers are uninformed and non-participative with power system	Informed, involved, and active consumers, demand response and distributed energy resources
Accommodates all generation and storage options	Dominated by central generation, many obstacles for distributed energy resources interconnection	Many distributed energy resources with plug-and-play convenience, focus on renewables
Enables new products, services and markets	Limited wholesale markets, not well integrated, limited opportunities for consumers	Mature, well-integrated wholesale markets, growth of new electricity markets for consumers
Provides power quality for the digital economy	Focus on outages, slow response to power quality issues	Power quality is a priority with a variety of quality/price options, rapid resolution of issues
Optimises assets and operates efficiently	Little integration of operational data with asset management, business process silos	Greatly expanded data acquisition of grid parameters, focus on prevention, minimising impact to consumers
Anticipates and responds to system disturbances (self-heals)	Responds to prevent further damage, focus on protecting assets following faults	Automatically detects and responds to problems, focus on prevention, minimising impact to consumers
Operates resiliently against attack and natural disaster	Vulnerable to malicious acts of terror and natural disasters	Resilient to attack and natural disasters with rapid restoration capabilities

Source: DOE 2009a, The Smart Grid: An Introduction

- *Distributed-energy resource technology:* This area includes the integration of distributed-generation, storage, and demand-side resources for participation in electric-system operation. Consumer products such as smart appliances and electric vehicles are expected to become important components of this area as are renewable-generation components such as those derived from solar and wind sources. Aggregation mechanisms of distributed-energy resources are also considered.
- *Transmission and distribution (T&D) infrastructure:* T&D represents the delivery part of the electric system. Smart grid items at the transmission level include substation automation, dynamic limits, relay coordination, and the associated sensing, communication, and coordinated action. Distribution-level items include distribution automation (such as feeder-load balancing, capacitor switching, and restoration) and advanced metering (such as meter reading, remote-service enabling and disabling, and demand-response gateways).
- *Central generation:* Generation plants already contain sophisticated plant automation systems because the production-cost benefits provide clear signals for investment. While

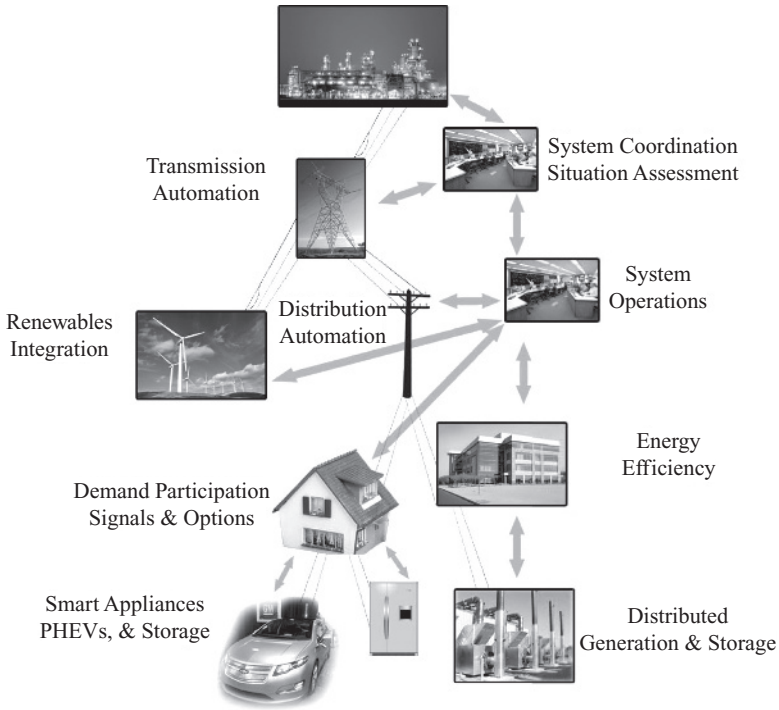

Figure 1.47 Scope of smart-grid concerns. *Source:* DOE 2009b Smart Grid System Report

technological progress is related to the smart grid, change is expected to be incremental rather than transformational.

- Information networks and finance: Information technology and pervasive communications are the cornerstones of a smart grid. Though the requirements (capabilities and performance) on the information networks will be different in different areas, their attributes tend to transcend application areas. Examples include interoperability and the ease of integration of automation components as well as cyber-security concerns. Information technology-related standards, methodologies, and tools also fall into this area. In addition, the economic and investment environment for procuring smart grid-related technology is an important part of the discussion concerning implementation progress.

Arguably, the integration of renewable and distributed energy sources, energy storage and demand-side resources into smart grids is the largest "new frontier" for smart grid advancements (DOE 2009b). Control and power electronics are two key enabling technologies for this. Power electronics is a part of the grid, and control is where "smart" is found (Ekanayake *et al*. 2012; Hopkins and Safiuddin 2010). Together with the power systems infrastructure, they form the backbone of smart grids.

This book is devoted to smart grid integration. For other aspects of smart grids, see e.g. (DOE 2009a 2009b; Ekanayake *et al*. 2012; Farhangi 2010; Momoh 2012).

1.6.3 Requirements for Smart Grid Integration

As mentioned above, the integration of renewable and distributed energy sources, energy storage and demand-side resources into smart grids is arguably the largest "new frontier" for smart grid advancements (DOE 2009b), in particular, when these sources are connected to smart grids via inverters. Several challenging technical problems should be addressed in order to fully maximise the benefits of smart grids.

1.6.3.1 Synchronisation

One of the most important problems in renewable energy and smart grid integration is how to synchronise the inverters with the grid (Blaabjerg *et al*. 2006; Rodriguez *et al*. 2007b; Shinnaka 2008; Wildi 2005). There are two different scenarios: one is before connecting an inverter to the grid and the other is during the operation. If an inverter is not synchronised with the grid or another power source, to which it is to be connected, then large transient currents may appear at the time of connection, which may cause damage. During normal operation, the inverter needs to be synchronised with the source it is connected to so that the system can work properly. In both scenarios, the grid information is needed accurately and in a timely manner so that the inverter is able to synchronise with the grid voltage. Depending on the control strategies adopted, the information needed can be any combination of the phase, the frequency and the voltage amplitude of the grid.

1.6.3.2 Power Flow Control

A simple reason for integrating renewable energy, distributed generation and storage systems, etc. into a grid is to inject power to the grid. This should be done in a controlled manner.

Naturally, this is done via directly controlling the current injected into the grid. Another option is to control the voltage difference between the inverter output voltage and the grid voltage. As a result, there are current-controlled strategies and voltage-controlled strategies. Current-controlled strategies are easy to implement but the inverters equipped with current-controlled strategies do not take part in the regulation of power system frequency and voltage and, hence, they may cause problems for the system stability when the share of power fed into the grid is significant. It is more difficult to control voltage than current but voltage-controlled inverters can easily take part in the regulation of system frequency and voltage, which is very important when the penetration level of renewable energy, distributed generation and storage systems, etc. reaches a certain level. The closer to conventional synchronous generators these sources behave, the smoother the operation of the grid is.

1.6.3.3 Power Quality Control

Power quality is a set of electrical properties that may affect the proper function of electrical systems. It is used to describe the electric power that drives an electrical load. Without proper power quality, an electrical device (or load) may malfunction, fail prematurely or not operate at all. Poor power quality can be described in different ways, e.g. the continuity of power, variations in magnitude and frequency, transient changes, harmonic contents in the waveform, low power factor, imbalance of phases, etc.

The integration of renewable energy, distributed generation and storage systems, etc. into smart grids via inverters may cause serious power quality issues. A major power quality issue in these applications is the harmonics in the voltage provided by the inverters and the current injected into the grid, which can be caused by the PWM switching effect, and the load current.

1.6.3.4 Neutral Line Provision

For applications in renewable energy, distributed generation and smart grids, there is often a need to have a neutral line to work with inverters so that a current path is provided for unbalanced loads. The provision of a neutral line also facilitates the independent operation of the three phases so that the coupling effect among the phases is minimised.

1.6.3.5 Fault Ride-through

When the penetration level of renewable energy, distributed generation and storage systems, etc. to the grid reaches a certain level, it is required to be able to successfully negotiate the short faults that have occurred in the grid, e.g. voltage sags, voltage dips, phase jumps, frequency variations, etc. (Rodriguez *et al*. 2007a; Song and Huang 2010; Timbus *et al*. 2006b). They can only disconnect from the grid when the faults are serious. As an example, Figure 1.48 illustrates the boundaries for connecting/disconnecting wind turbines in the Danish power system under different voltage disturbances with different time scales.

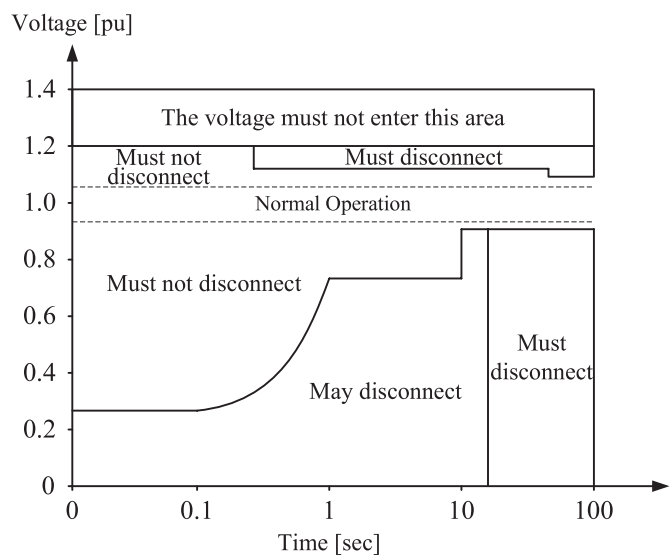

Figure 1.48 Operational boundaries for wind farms in the Danish power system under different voltage disturbances with different time scales. *Source:* Timbus A, Teodorescu T, Blaabjerg F, Liserre M and Rodriguez P 2006 PLL algorithm for power generation systems robust to grid voltage faults in *Proceedings of the 37th IEEE Power Electronics Specialists Conference (PESC)*, pp. 1–7

Table 1.5 Some islanding detection methods

Passive methods	Active methods	Utility-based methods
Under-/over-voltage	Impedance measurement	Manual disconnection
Under-/over-frequency	Impedance measurement at a specific frequency	Automated disconnection
Phase jump detection	Slip mode frequency shift	Transfer-trip method
Harmonics detection	Frequency bias	Impedance insertion

1.6.3.6 Anti-islanding

Here, islanding refers to unexpected situations when renewable energy, distributed generation or storage systems continue feeding power to a grid that has lost power. Islanding can be dangerous for the utility workers, who may not realise that a circuit is still powered, and it may prevent automatic re-connection of devices.[7] Hence, islanding must be detected and the renewable energy, distributed generation and storage systems involved must be disconnected from the grid. This is referred to as anti-islanding. However, intentional islanding is often used by backup power systems to power the local circuit when it is disconnected from the grid.

As mentioned before, synchronisation is one of the most important requirements for smart grid integration. A good synchronisation method could be utilised for fault ride-through (Rodriguez *et al*. 2006b; Timbus *et al*. 2006b) and anti-islanding. Islanding detection is the subject of considerable research and there are many methods available, which can be classified into passive methods, active methods and utility-based methods.[8] Passive methods attempt to detect transient changes on the grid caused by grid failures while active methods attempt to detect grid failures by injecting small signals into the grid and then detecting whether or not the signal changes. The utility can also apply a variety of methods to force systems offline in the event of a failure. Some of these methods are listed in Table 1.5.

The first four problems are addressed in this book in detail and the last two problems are not discussed any further.

[7] http://en.wikipedia.org/wiki/Islanding
[8] http://en.wikipedia.org/wiki/Islanding